Product Catalog

Measurement & Instrumentation

www.fielddevices.foxboro.com

Life Is On

Foxboro
by Schneider Electric

Specifying Your Instrument or Accessory

You can easily specify many instruments and accessories described in this catalog. Sections covering our most popular items include all the technical data you need to know for most applications. To specify the appropriate item, simply follow the step-by-step procedure at the end of each description. Your Foxboro representative can help also.

For Example:

Choose the product code.
Itemize the information needed to complete the specification.

Ordering

To order, just contact your Foxboro representative, or call, in North America:

1-866-746-6477, or International: 001-508-549-2424.
www.buyautomation.com/officelocator

Give us the ordering information using this catalog. Then tell us where you want the order shipped and when you need it delivered. We'll do the rest.

Need Help?

If you have questions, let us know. We're ready – and eager – to assist you. Applications are a Foxboro specialty. We can help you figure out the best instrument for your purpose.

Pneumatic catalog available – ask your Foxboro representative for catalog FX-0180.

Flow **CFT51**

How to Order—Specify model number CFT51 followed by order code for each selection

Mass Flowtube Interface				
Foxboro CFS10 and CFS20 Series Flowtubes	-B			
Transmitter Mounting				
Remote Mounted Transmitter		1		
Language				
English			E	
Nominal Supply Voltage				
120 to 240 V ac, 50 or 60 Hz				A
10 to 36 V dc				B

Table of Contents

The following chapters contain Product Specifications of the Instruments:

IAP10	Absolute Pressure Transmitters – Direct Mount
IAP20	Absolute Pressure Transmitters – Bracket Mount
IGP10	Gauge Pressure Transmitters – Direct Mount
IGP20	Gauge Pressure Transmitters – Bracket Mount
IGP25	Gauge Pressure Transmitters – Multirange for Wide Adjustment (400:1 Turndown)
IGP50	Gauge Pressure Transmitters – Premium Performance
IGP60	Gauge Pressure Transmitters – Premium Performance
IDP10	Differential Pressure
IDP15	Differential Pressure - Draft Range
IDP25	Differential Pressure – Multirange for Wide Adjustment Capability (400:1 Turndown)
IDP31	Differential Pressure – 100 msec Response Time
IDP32	Differential Pressure – High Static Pressure
IDP50	Differential Pressure – Premium Performance
IMV25	Multivariable Transmitter – AP, DP, T
IMV30	Multivariable Transmitter – AP, DP, T, with Flow Calculations
IMV31	Multivariable Transmitter – AP, DP, T, with Level Calculations
IPI10	P to I (Pneumatic-to-Current) Converter
Pressure Seals	Remote and Direct-Connect Seals, including Flange Mount for Level, and Both Sanitary and Pulp & Paper Industry Connections

IAP10 I/A Series®
Intelligent Absolute Pressure Transmitters

- Choice of Mounting Styles
  - ✔ *IAP10 for compact light weight and direct-to-process mounting (bracket optionally available)*
- Rugged & Dependable
  - ✔ *Field-proven silicon strain gauge technology*
  - ✔ *Corrosion-resistant epoxy finish*
- Superior Performance
  - ✔ *Accuracy to ±0.05% of span*
  - ✔ *Ambient temperature effects to ±(0.03% URL+0.06%) span per 28°C (50°F)*
- Choice of Electronics Modules
  - ✔ *Intelligent HART, Foundation Fieldbus, FoxCom, and 4-20 mA versions*
  - ✔ *Economical 4-20 mA and 1 to 5 Vdc versions*
- LCD Indicator/Pushbutton Configurator
  - ✔ *Optional on Foundation Fieldbus, FoxCom/4-20 mA, and HART/4-20 versions; Standard on 4-20 mA and 1 to 5 Vdc versions*
- Standard Warranty 5 Years

Functional Specifications

Sensor Temperature Limits:
DC200: -46 & +121°C (-50° + 250°F) FC77: -29 & +85°C (-20 & +185°F)

Ambient Temperature Limits:
DC200: -40 +85°C (-40 & +185°F)
FC77: -29 & +85°C (-20 & +185°F)

Electrical Classification:
Various agency certifications for Zone and Division hazardous locations. Refer to Product Specification sheets for complete specifications.

This transmitter measures absolute pressure and transmits a 4-20 mA, 1 to 5 Vdc, or digital output signal over a pair of wires.

For complete specifications, refer to Product Specification Sheets PSS 2A-1C13 A, B, C, D, E, J, K, and L.

Output signal and configuration:

Version	Output Choices	Configure From
-D	✔ FoxCom Digital ✔ FoxCom/4 to 20 mA	✔ I/A Series Workstation ✔ Hand-Held Terminal ✔ Personal Computer ✔ Optional Pushbuttons
-T	✔ HART/ 4 to 20mA	✔ HART Communicator ✔ Workstation ✔ Personal Computer
-F	✔ Foundation Fieldbus	✔ Workstation
-A	✔ 4 to 20mA	✔ Standard Pushbuttons
-V	✔ 1-5 Vdc	✔ Standard Pushbuttons

Span, range and overrange limits:
Direct Connected Absolute Press. IAP10

Span Limits Code	Span Limits		
C	0.007 & 0.21 MPa	1 & 30 psi	0.07 & 2.1 bar or kg/cm^2
D	0.07 & 2.1 MPa	10 & 300 psi	0.70 & 21 bar or kg/cm^2
E	0.70 & 21 MPa	100 & 3000 psi	7.0 & 210 bar or kg/cm^2

	Range Limits (absolute)		
C	0 & 0.21 MPa	0 & 30 psi	0 & 2.1 bar or kg/cm^2
D	0 & 2.1 MPa	0 & 300 psi	0 & 21 bar orkg/cm^2
E	0 & 21 MPa	0 & 3000 psi	0 & 210 bar or kg/cm^2

	Maximum Overrange (absolute)		
C	0.31 MPa	45 psi	3.15 bar or kg/cm^2
D	3.1 MPa	450 psi	31.5 bar orkg/cm^2
E	31 MPa	4500 psi	315 bar or kg/cm^2

Performance Specifications

Accuracy (Includes Linearity, Hysteresis, and Repeatability):

Version	Output	Signal Accuracy in % of Calib. Span
-D or T	Digital	±0.05
	4 to 20 mA	±0.075
-F	Digital	±0.05
-A	4 to 20 mA	±0.20
-V	1 to 5 Vdc	±0.10

Refer to Product Specification Sheets for accuracies at small spans (less than 10% of URL).

Physical Specifications

Material Combinations and Value Package: Refer to "How to Order" for material versions available. For exceptional value and corrosion resistance, the standard material combination with the lowest price is 316L ss Process Connection with 316L ss Sensor.

Sensor Fill Fluid: Dow Corning dimethylsiloxane (DC 200) or fluorinated hydrocarbon (3M Fluorinert FC77), as specified.

Enclosure Classification: Meets IEC IP66 & NEMA Type 4X.

How to Order – Specify model number IAP10

Electronic Versions and Output Signals

4-20 mA/FoxCom	D
4 to 20 mA/HART	T
Foundation Fieldbus	F
4 to 20 mA	A
1 to 5 V dc	V

Structure Code – Select from one of the following eight groups:

1. Transmitter Only (no seals)

Process Connection	Sensor	Sensor Fill Fluid	Connection Type	
316L ss	Co-Ni-Cr	Silicone	½ NPT External Thread, ¼ NPT Internal Thread	20
316L ss	Co-Ni-Cr	Fluorinert	½ NPT External Thread, ¼ NPT Internal Thread	21
316L ss	316L ss	Silicone	½ NPT External Thread, ¼ NPT Internal Thread	22
316L ss	316L ss	Fluorinert	½ NPT External Thread, ¼ NPT Internal Thread	23
316L ss	Hastelloy C	Silicone	½ NPT External Thread, ¼ NPT Internal Thread	30
316L ss	Hastelloy C	Fluorinert	½ NPT External Thread, ¼ NPT Internal Thread	31
Hastelloy C	Hastelloy C	Silicone	½ NPT External Thread, ¼ NPT Internal Thread	32
Hastelloy C	Hastelloy C	Fluorinert	½ NPT External Thread, ¼ NPT Internal Thread	33

2. Flameproof Transmitter Only (no seals)

Process Connection	Sensor	Sensor Fill Fluid	Connection Type	
316L ss	316L ss	Silicone	½ NPT External Thread, ¼ NPT Internal Thread	52
316L ss	316L ss	Fluorinert	½ NPT External Thread, ¼ NPT Internal Thread	53
316L ss	Hastelloy C	Silicone	½ NPT External Thread, ¼ NPT Internal Thread	60
316L ss	Hastelloy C	Fluorinert	½ NPT External Thread, ¼ NPT Internal Thread	61
Hastelloy C	Hastelloy C	Silicone	½ NPT External Thread, ¼ NPT Internal Thread	62
Hastelloy C	Hastelloy C	Fluorinert	½ NPT External Thread, ¼ NPT Internal Thread	63

3. Transmitter with Sanitary Connection(1)

Process Connection	Sensor	Sensor Fill Fluid	Connection Type	
316L ss	316L ss	NEOBEE M-20	1.5 in Tri-Clamp	TA
316L ss	316L ss	NEOBEE M-20	2.0 in Tri-Clamp	T2
316L ss	316L ss	NEOBEE M-20	3.0 in Tri-Clamp	T3
316L ss	Hastelloy C276	NEOBEE M-20	1.5 in Tri-Clamp	TB
316L ss	Hastelloy C276	NEOBEE M-20	2.0 in Tri-Clamp	T4
316L ss	Hastelloy C276	NEOBEE M-20	3.0 in Tri-Clamp	T5
316L ss	316L ss	NEOBEE M-20	Mini Tank Spud Type, 1½ in extension	M1
316L ss	316L ss	NEOBEE M-20	Mini Tank Spud Type, 6 in extension	M6
316L ss	316L ss	NEOBEE M-20	Mini Tank Spud Type, 9 in extension	M9
316L ss	316L ss	NEOBEE M-20	1 in Threaded Spud Type	PX
316L ss	316L ss	NEOBEE M-20	1.5 in Threaded Spud Type	PZ

4. Transmitter with Pulp & Paper Connection[1]

Process Connection	Sensor	Sensor Fill Fluid	Connection Type	
316L ss	316L ss	Silicone	Sleeve Type, 1 inch nominal	PA
316L ss	316L ss	Silicone	Threaded Type, 1 inch nominal	PB
316L ss	316L ss	Silicone	Sleeve Type, 1½ inch nominal	PC
316L ss	316L ss	Silicone	Threaded Type, 1½ inch nominal	PD
316L ss	Hastelloy C276	Silicone	Sleeve Type, 1 inch nominal	PE
316L ss	Hastelloy C276	Silicone	Threaded Type, 1 inch nominal	PF
316L ss	Hastelloy C276	Silicone	Sleeve Type, 1½ inch nominal	PG
316L ss	Hastelloy C276	Silicone	Threaded Type, 1½ inch nominal	PH
316L ss	Hastelloy C276	Silicone	Threaded Type, 1½ inch nominal (fits Ametek spud)	PJ

5. Transmitter Prepared for Foxboro Model Coded Seals[2]

Transmitter Prepared for Foxboro Direct Connect Seal; Silicone Fill in Sensor[3]	D1
Transmitter Prepared for Foxboro Remote Mount Seal; Silicone Fill in Sensor[4]	S3

6. Transmitters Prepared for non-Foxboro Seals

Transmitter Prepared for Remote Seal; Silicone Fill in Sensor	SC
Transmitter Prepared for Remote Seal; Fluorinert Fill in Sensor	SD

7. Flameproof Transmitter Prepared for Foxboro Model Coded Seals[2]

Flameproof Transmitter Prepared for Direct Connect Seal; Silicone Fill in Sensor[3]	D5
Flameproof Transmitter Prepared for Remote Mount Seal; Silicone Fill in Sensor[4]	S5

8. Flameproof Transmitter Prepared for non-Foxboro Seals

Flameproof Transmitter Prepared for Remote Seal; Silicone Fill in Sensor	SH
Flameproof Transmitter Prepared for Remote Seal; Fluorinert Fill in Sensor	SJ

Span Limits

MPa	psi	bar or kg/cm^2	
0.007 and 0.21	1 and 30	0.07 and 2.1	C
0.07 and 2.1	10 and 300	0.70 and 21	D
0.7 and 21	100 and 3000	7.0 and 210	E

Conduit Connection and Housing Material

½ NPT Conduit Connections, Aluminum Housing	1
PG 13.5 Conduit Connections, Aluminum Housing	2
½ NPT Conduit Connections, 316 ss Housing	3
PG 13.5 Conduit Connections, 316 ss Housing	4
M20 Conduit Connection, Both Sides, Aluminum Housing	5
M20 Conduit Connection, Both Sides, 316 ss Housing	6

Electrical Safety (See PSS for Description and Restrictions)

ATEX II GD, EEx ia IIC, or II 1/2 GD, EEx ib IIC	E
ATEX Flameproof; II 2 GD, EEx d IIC, Zone 1	D
ATEX II 3 GD, EEx nL IIC	N
ATEX Multiple Certifications (E and N)	M
ATEX Multiple Certifications (E, D, and N)	P
CSA Certified	C
CSA Certified (including Flameproof Zones)	B
FM Approved	F
FM Approved (including Flameproof Zones)	G
IECEx Intrinsically Safe, FISCO Ex ia IIC T4	T
IECEx Intrinsically Safe, Protection n; FNICO Ex	U
IECEx Flameproof, Ex d IIC T6	V

Optional Selections

Mounting Bracket Set – Specify Only One

Painted Steel Bracket with Plated Steel Bolts (for Conduit Connection Codes 1 and 3)	-M1
Stainless Steel Bracket with Stainless Steel Bolts (for Conduit Connection Codes 1 and 3)	-M2
Painted Steel Bracket with Plated Steel Bolts (for Conduit Connection Codes 2 and 4)	-M3
Stainless Steel Bracket with Stainless Steel Bolts (for Conduit Connection Codes 2 and 4)	-M4
Painted Steel Bracket with Plated Steel Bolts for use withM20 (for Conduit Connection Codes 5 & 6)	-M5
Stainless Steel Bracket with Stainless Steel Bolts for use with M20 (for Conduit Connection Codes 5 and 6)	-M6

Digital Indicator with Pushbuttons – Specify Only One

Digital Indicator, Pushbuttons, and Window Cover for IAP10-D, -T, and -F only[5]	-L1
Blind (solid) cover over the std. LCD on -A, or -V	-L2

Conduit Thread Adapters – Specify Only One

Hawk-Type ½ NPT Cable Gland for use with Conduit Connection Codes 1 & 3	-A1
Plastic PG 13.5 Connector for use with Conduit Connection Codes 2 & 4	-A2
M20 Connector for use with Conduit Connection Codes 1 & 3	-A3
Trumpet shaped PG 13.5 Cable Gland (Nickel Plated Brass) for use with Conduit Connection Codes 2 & 4	-A4

Vent Screw and Block & Bleed Valve – Specify Only One

Vent screw in process connection	-V1
Block and Bleed Valve -carbon steel	-V2
Block and Bleed Valve -316 ss	-V3
Block and Bleed Valve -316 ss body w/Monel trim	-V4

Electronic Housing Features

External Zero Adjustment	-Z1
Custody Transfer Lock and Seal	-Z2
External Zero Adjustment and Custody Transfer Lock & Seal	-Z3

Factory Configuration–Specify Only One

Digital Output (FoxCom only)	-C1
Full Factory Configuration (Requires configuration form)	-C2

Instruction Book Options

Without Instruction Book & CD	-K1

Cleaning and Preparation

Unit Degreased – for Silicone Filled Sensors Only Not for Oxygen/Chlorine Service, Option -V1, or Pressure Seals	-X1
Cleaned and Prepared for Oxygen Service – for Fluorinert Filled Sensors Only Not with Option -V1, or Pressure Seals	-X2
Cleaned and Prepared for Chlorine Service – with Structure Code 33 or 63 Only Not with Option -V1, or Pressure Seals	-X3

Miscellaneous Optional Selections

G ½ B Manometer Process Connection	-G
R ½ Process Connection (½ NPT to R ½ Adapter)	-R
Five-Year Warranty	-W
Supplemental Customer Tag	-T
Low Temperature Operative Limit of -50°C (-58°F) for Entire Transmitter	-J

Specify calibrated range

Specify information for instrument tag

Notes

1 Refer to Section "Pressure Seals and Industry-Specific Connections" for additional information.
2 Both transmitter and pressure seal model codes are required.
3 Direct Connect Seal models that may be specified are PSTAD, PSFAD, and PSISD.
4 Remote Mount Seal models that may be specified are PSFPS, PSFES, PSFAR, PSTAR, PSISR, PSSCR and PSSSR.
5 Standard equipment on IAP10, -A, and -V.

IAP20 I/A Series®
Intelligent Absolute Pressure Transmitters

- Choice of Mounting Styles
  - ✔ *IAP20, bracket mounted for lower ranges, more material options, ATEX flameproof design*
- Rugged and Dependable
  - ✔ *Field-proven silicon strain gauge technology*
  - ✔ *Corrosion-resistant epoxy finish*
- Superior Performance
  - ✔ *Accuracy to ±0.05% of span*
  - ✔ *Ambient temperature effects to ±(0.03% URL+0.06%) span per 28°C (50°F)*
- Choice of Electronics Modules
  - ✔ *Intelligent HART, Foundation Fieldbus, FoxCom, 4-20mA, and HART, 4-20 mA versions*
  - ✔ *Economical 4-20 mA and 1 to 5 Vdc versions*
- LCD Indicator/Pushbutton Configurator
  - ✔ *Optional on Foundation Fieldbus, FoxCom/ 4-20 mA, and HART/4-20 versions; Standard on 4-20 mA and 1 to 5 Vdc versions*
- Standard Warranty 5 Years

Functional Specifications

Sensor Temperature Limits:
DC200: -46 & +121°C (-50° + 250°F)
FC77: -29 & +85°C (-20 & +185°F)

Ambient Temperature Limits:
DC200: -40 +85°C (-40 & +185°F)
FC77: -29 & +85°C (-20 & +185°F)

Electrical Classification: Various agency certifications for Zone and Division hazardous locations. Refer to Product Specification sheets for complete specifications.

This transmitter measures absolute pressure and transmits a 4-20 mA, 1 to 5 Vdc, or digital output signal over a pair of wires.

For complete specifications, refer to Product Specification Sheets PSS 2A-1C13 A, B, C, D, E, and J.

Output, signal and configuration:

Version	Output Choices	Configure From
-D	✔ FoxCom Digital ✔ FoxCom/4 to 20mA	✔ I/A Series Workstation ✔ Hand-Held Terminal ✔ Personal Computer ✔ Optional Pushbuttons
-T	✔ HART/ 4 to 20mA	✔ HART Communicator ✔ Personal Computer
-F	✔ Foundation Fieldbus	✔ Workstation
-A,	✔ 4 to 20 mA	✔ Standard Pushbuttons
-V	✔ 1to 5 Vdc	✔ Standard Pushbuttons

Span and range limits:

Span Limits Code	Span Limits		
B	0.87 & 50 kPa	0.125 & 7 psi	8.7 & 500 mbar
C	7.0 & 210 kPa	1.0 & 30 psi	70 & 2100 mbar
D	0.07 & 2.1 MPa	10 & 300 psi	0.70 & 21 bar
E	0.70 & 21 MPa	100 & 3000 psi	7.0 & 210 bar

Span Limits Code	Range Limits (absolute)(1)		
B	0 & +50 kPa	0 & 7 psi	0 & 0.5 bar or kg/cm^2
C	0 & 210 kPa	0 & 30 psi	0 & 2.1 bar or kg/cm^2
D	0 & 2.1 MPa	0 & 300 psi	0 & 21 bar or kg/cm^2
E	0 & 21 MPa	0 & 3000 psi	0 & 210 bar or kg/cm^2

Maximum Overrange (absolute)			
	Overrange Pressure Rating		
Transmitter Configuration (See Model Code for Description of Options)	MPa	psi	bar or kg/cm^2
Standard or with Option -B2, -D3, or -D7	25	3625	250
With Option -B3	20	2900	200
With Option -D1	16	2320	160
With Option -B1 or -D5	15	2175	150
With Option -D2, -D4, -D6, or -D8	10	1500	100
With Structure Codes 78 and 79 (pvdf insert)	2.1	300	21

Performance Specifications

Accuracy (Includes Linearity, Hysteresis, and Repeatability):

Version	Output	Signal Accuracy in % of Calib. Span
-D or -T	Digital	±0.05
	4 to 20 mA	±0.75
-F	Digital	±0.05
-A	4 to 20 mA	±0.20
-V	1 to 5 Vdc	±0.10
Refer to PSSs for accuracies at small spans (less than 10% of URL).		

Physical Specifications

Material Combination & Value Package: Refer to "How To Order" for material versions available. For exceptional value and corrosion resistance, the standard material combination with the lowest price is 316 ss Hi-Side Process Cover with 316L ss Sensor.

Sensor Fill Fluid: Dow Corning dimethylsiloxane (DC 200) or fluorinated hydrocarbon (3M Fluorinert FC 77), as specified.

Enclosure Classification: Meets IEC IP66 and NEMA Type 4X.

How to Order – Specify model number IAP20 followed by order code for each selection

Electronic Versions and Output Signals

4-20 mA/FoxCom	D
4 to 20 mA/HART	T
Foundation Fieldbus	F
4 to 20 mA	A
1 to 5 V dc	V

Structure Code – Select from one of the following three groups:

1. Transmitter

Hi-Side Process Cover	Sensor	Sensor Fill Fluid	
Steel	Co-Ni-Cr	Silicone	10
Steel	Co-Ni-Cr	Fluorinert	11
Steel	316L ss	Silicone	12
Steel	316L ss	Fluorinert	13
Steel	Hastelloy C	Silicone	16
Steel	Hastelloy C	Fluorinert	17
316 ss	Co-Ni-Cr	Silicone	20
316 ss	Co-Ni-Cr	Fluorinert	21
316 ss	316L ss	Silicone	22
316 ss	316L ss	Fluorinert	23
316 ss	316L ss, Gold Plated	Silicone	2G
316 ss	Monel	Silicone	24
316 ss	Monel	Fluorinert	25
316 ss	Hastelloy C	Silicone	26
316 ss	Hastelloy C	Fluorinert	27
Monel	Monel	Silicone	34
Monel	Monel	Fluorinert	35
Hastelloy C	Hastelloy C	Silicone	46
Hastelloy C	Hastelloy C	Fluorinert	47
Hastelloy C	Tantalum	Silicone	48
Hastelloy C	Tantalum	Fluorinert	49
pvdf Insert (Kynar®)	Tantalum	Silicone (Used with Process Connector Type 7 below)	78
pvdf Insert (Kynar)	Tantalum	Fluorinert (Used with Process Connector Type 7 below)	79

2. Transmitter Prepared for Foxboro Model Coded Seals(2)

Transmitter Prepared for Remote Seal on HI Side; Silicone fill in sensor. . . . S3

3. Transmitter Prepared for non-Foxboro Seals

Transmitter Prepared for Remote Seal; Silicone Fill in Sensor. . . . SC

Span Limits

kPa	psi	mbar	in H_20	
0.87 and 50	0.125 and 7	8.7 and 500	3.5 and 200	B
7 and 210	1 and 30	70 and 2100	28 and 840	C
MPa	**psi**	**bar or kg/cm^2**		
0.07 and 2.1	10 and 300	0.70 and 21		D
0.7 and 21	100 and 3000	7.0 and 210		E

Process Connector Type (Material Same as Process Cover Material)

None, Covers Tapped for ¼ NPT	0
¼ NPT	1
½ NPT	2
Rc ¼	3
Rc ½	4
½ Schedule 80 Welding Neck	6
None, pvdf (Kynar) insert tapped for ½ NPT (used with Structure Codes 78 & 79)	7

Conduit Connection and Housing Material

½ NPT Conduit Connections, Aluminum Housing	1
PG 13.5 Conduit Connections, Aluminum Housing	2
½ NPT Conduit Connections, 316 ss Housing	3
PG 13.5 Conduit Connections, 316 ss Housing	4
M20 Conduit Connection, Both Sides, Aluminum Housing	5
M20 Conduit Connection, Both Sides, 316 ss Housing	6

Electrical Safety (See PSS for Description and Restrictions)

ATEX II GD, EEx ia IIC, or II ½ GD, EEx ib IIC	E
ATEX Flameproof; II 2 GD, EEx d IIC, Zone 1	D
ATEX II 3 GD, EEx nL IIC	N
ATEX Multiple Certifications (E, D, and N)	M
CSA Certified	C
CSA Certified (including Flameproof Zones)	B
FM approved	F
FM approved (including Flameproof Zones)	G
IECEx Intrinsically Safe, Ex ia IIC T4	T
IECEx Intrinsically Safe, Protection n; Ex nL IIC T4	U
IECEx Flameproof, Ex d IIC T6	V

Optional Selections

Mounting Bracket Set—Specify Only One

Painted Steel Bracket with Plated Steel Bolts	-M1
Stainless Steel Bracket with Stainless Steel Bolts	-M2
Universal style Stainless Steel Bracket with Stainless Steel Bolts	-M3

Indicator with Internal Pushbuttons

Digital Indicator,Pushbuttons,and Window Cover for IAP20-D, -T, and -F only(3)	-L1
Blind (solid) cover over the std. LCD on -A or -V	-L2

DIN 19213 Construction
(Specify Only One and Specify Process Connector Code 0)

Single Ended Process Cover with M10 Bolting	-D1
Double Ended Process Cover with M10 Bolting (Blind Kidney Range on Back)	-D2
Single Ended Process Cover with 7/16-inch Bolting	-D3
Double Ended Process Cover with 7/16-inch Bolting (Blind Kidney Flange on Back)	-D4
Single Ended Process Covers with 316 ss 7/16-inch Bolting	-D5
Double Ended Process Covers with 316 ss 7/16-inch Bolting (Blind Kidney Flange on Back)	-D6
Single Ended Process Covers with 17-4 ss 7/16-inch Bolting	-D7
Double Ended Process Covers with 17-4 ss 7/16-inch Bolting (Blind Kidney Flange on Back)	-D8

Cleaning and Preparation—Specify Only One

Unit Degreased (not for Oxygen/Chlorine Service)(4)	-X1
Cleaned and Prepared for Oxygen Service(5)	-X2
Cleaned and Prepared for Chlorine Service(5)	-X3

Bolting for Process Covers and Process Connectors—Specify Only One

316 ss Bolts and Nuts (Maximum Static Pressure 150 bar or kg/cm^2, 2175psi)	-B1
17-4 ss Bolts and Nuts	-B2
B7M Bolts and Nuts (NACE)(Pressure de-rated for Span Code E)	-B3

Conduit Thread Adapters – Specify Only One

Hawk-Type ½ NPT Cable Gland for use with Conduit Connection Codes 1 & 3	-A1
Plastic PG 13.5 Connector for use with Conduit Connection Codes 2 & 4	-A2
M20 Connector for use with Conduit Connection Codes 1 & 3	-A3
Trumpet shaped PG 13.5 Cable Gland (Nickel Plated Brass) for use with Conduit Connection Codes 2 & 4	-A4

Electronic Housing Features–Specify Only One

External Zero Adjustment	-Z1
Custody Transfer Lock & Seal	-Z2
External Zero Adjustment and Custody Transfer Lock & Seal	-Z3

Ermeto Connectors–Specify Only One

Steel, Connecting 6 mm Tubing to ¼ NPT Process Connector	-E1
Steel, Connecting 12 mm Tubing to ½ NPT Process Connector	-E2
316 ss, Connecting 6 mm Tubing to ¼ NPT Process Connector	-E3
316 ss, Connecting 12 mm Tubing to ½ NPT Process Connector	-E4

Factory Configuration–Specify Only One

Digital Output (FoxCom only)	-C1
Full Factory Configuration (Requires Configuration Form)	-C2

Instruction Book Options

Without Instruction Book & CD	-K1

Miscellaneous Optional Selections

Vent Screw In Side of Process Cover	-V
Five-Year Warranty	-W
Supplemental Customer Tag	-T
Low Temperature Operative Limit of -50°C (-58°F) for Entire Transmitter	-J

Specify calibrated range

Specify information for instrument tag

Notes

1. Upper Range Limit is the lower of the values in this table and in the Maximum Overrange Table which lists the de-rated pressures associated with various options.
2. Both transmitter and pressure seal model codes are required. Pressure seal models that may be specified are PSFPS, PSFES, PSFAR, PSTAR, PSISR, PSSCR, and PSSSR.
3. Standard equipment on, IAP20 -A and -V
4. Available only with Structure Codes having Silicone
5. Available only with Structure Codes having Fluorinert and not available with carbon steel process covers

IGP10 I/A Series®
Intelligent Gauge Pressure Transmitters

- Choice of Mounting Styles
  - ✔ *IGP10 for compact light weight and direct-to-process mounting (bracket optionally available)*
- Rugged & Dependable
  - ✔ *Field-proven silicon strain gauge technology*
  - ✔ *Corrosion-resistant epoxy finish*
- Superior Performance
  - ✔ *Accuracy to ±0.05% of span*
  - ✔ *Ambient temperature effects to ±(0.03% URL+0.06%) span per 28°C (50°F)*
- Choice of Electronics Modules
  - ✔ *Intelligent HART, Foundation Fieldbus, FoxCom, and 4-20 mA versions*
  - ✔ *Economical 4-20 mA and 1 to 5 Vdc versions*
- LCD Indicator/Pushbutton Configurator
  - ✔ *Optional on Foundation Fieldbus, FoxCom/4-20 mA, and HART/4-20 versions; Standard on 4-20 mA and 1 to 5 Vdc versions*
- Standard Warranty 5 Years

Functional Specifications

Sensor Temperature Limits:
DC200: -46 & +121°C (-50° + 250°F)
FC77: -29 & +85°C (-20 & +185°F)

Ambient Temperature Limits:
DC200: -40 +85°C (-40 & +185°F)
FC77: -29 & +85°C (-20 & +185°F)

Electrical Classification: Various agency certifications for Zone and Division hazardous locations. Refer to Product Specification sheets for complete specifications.

This transmitter measures gauge pressure and transmits a 4-20 mA, 1 to 5 Vdc, or digital output signal over a pair of wires.

For complete specifications, refer to Product Specification Sheets PSS 2A-1C13 A, B, C, D, E, F, K, and L.

Output Signal and Configuration:

Version	Output Choices	Configure From
-D	✔ FoxCom Digital ✔ FoxCom/4 to 20 mA	✔ I/A Series Workstation ✔ Hand-Held Terminal ✔ Personal Computer ✔ Optional Pushbuttons
-T	✔ HART/ 4 to 20mA	✔ HART Communicator ✔ Workstation ✔ Personal Computer
-F	✔ Foundation Fieldbus	✔ Workstation
-A	✔ 4 to 20mA	✔ Standard Pushbuttons
-V	✔ 1-5 Vdc	✔ Standard Pushbuttons

Span, Range and Overrange Limits:

Span Limits Code	Span Limits		
B	0.87 & 50 kPa	3.5 & 200 in H_2O	8.7 & 500 mbar
C	0.007 & 0.21 MPa	1 & 30 psi	0.07 & 2.1 bar or kg/cm^2
D	0.07 & 2.1 MPa	10 & 300 psi	0.70 & 21 bar or kg/cm^2
E	0.70 & 21 MPa	100 & 3000 psi	7.0 & 210 bar or kg/cm^2
F	14 & 42 MPa	2000 & 6000 psi	140 & 420 bar or kg/cm^2
K	17 & 52	2500 & 7500 psi	175 & 525 bar or kg/cm^2
G	35 & 105	5000 & 15000 psi	350 & 1050 bar or kg/cm^2
H	70 & 210	10000 & 30000 psi	700 & 2100 bar or kg/cm^2

	Range Limits		
C	0 & 0.21 MPa	0 & 30 psi	0 & 2.1 bar or kg/cm^2
D	0 & 2.1 MPa	0 & 300 psi	0 & 21 bar orkg/cm^2
E	0 & 21 MPa	0 & 3000 psi	0 & 210 bar or kg/cm^2
F	0 & 42 MPa	0 & 6000 psi	0 & 420 bar or kg/cm^2
K	0 & 52 MPa	0 & 7500 psi	0 & 525 bar or kg/cm^2
G	0 & 105 MPa	0 & 15000 psi	0 & 1050 bar or kg/cm^2
H	0 & 210 MPa	0 & 30000 psi	0 & 2100 bar or kg/cm^2

	Maximum Overrange		
C	0.31 MPa	45 psi	3.15 bar or kg/cm^2
D	3.1 MPa	450 psi	31.5 bar orkg/cm^2
E	31 MPa	4500 psi	315 bar or kg/cm^2
F	63 MPa	9000 psi	630 bar or kg/cm^2
K	79 MPa	11250 psi	775 bar or kg/cm^2
G	137 MPa	19500 psi	1365 bar or kg/cm^2
H	231 MPa	33000 psi	2310 bar or kg/cm^2

Note: Span Limit Code B only available with Sanitary and Pulp and Paper Structures.

Performance Specifications

Accuracy (Includes Linearity, Hysteresis, and Repeatability):

Version	Output	Signal Accuracy in % of Calib. Span
-D or -T	Digital	±0.05
	4 to 20 mA	±0.075
-F	Digital	±0.05
-A	4 to 20 mA	±0.20
-V	1 to 5 Vdc	±0.10

Refer to PSSs for accuracies at small spans (less than 10% of URL) and Span Codes K, G, and H.

Physical Specifications

Material Combinations and Value Package: Refer to "How to Order" for material versions available. For exceptional value and corrosion resistance, standard material combination with the lowest price is 316 ss Process Connection and 316L ss or Sensor.

Sensor Fill Fluid: Dow Corning dimethylsiloxane (DC 200) or fluorinated hydrocarbon (3M Fluorinert FC77), as specified.

Enclosure Classification: Meets IEC IP66 & NEMA Type 4X.

How to Order – Specify Model IGP10

Electronics Versions and Output Signal

4-20 mA/FoxCom . . . . . D
4 to 20 mA/HART . . . . . T
Foundation Fieldbus . . . . . F
4 to 20 mA . . . . . A
1 to 5 V dc V

Structure Code – Select from one of the following eight groups:

1. Transmitter Only (no seals)

Process Connection	Sensor	Sensor Fill Fluid	Connection Type	
316L ss	Co-Ni-C	Silicone	½ NPT External Thread, ¼ NPT Internal Thread	20
316L ss	Co-Ni-Cr	Fluorinert	½ NPT External Thread, ¼ NPT Internal Thread	21
316L ss	316L ss	Silicone	½ NPT External Thread, ¼ NPT Internal Thread	22
316L ss	316L ss	Fluorinert	½ NPT External Thread, ¼ NPT Internal Thread	23
316L ss	Hastelloy C	Silicone	½ NPT External Thread, ¼ NPT Internal Thread	30
316L ss	Hastelloy C	Fluorinert	½ NPT External Thread, ¼ NPT Internal Thread	31
Hastelloy C	Hastelloy C	Silicone	½ NPT External Thread, ¼ NPT Internal Thread	32
Hastelloy C	Hastelloy C	Fluorinert	½ NPT External Thread, ¼ NPT Internal Thread	33
15-5 ss	15-5 ss	None	¼ NPT, Internal (available with Span Limit Code G & K only)	24
Inconel X-750	Inconel X-750	None	¼ NPT, Internal (available with Span Limit Code G & K only)	26
13-8 Mo ss	13-8 Mo ss	None	Autoclave F-250-C (c) Available with Span Limit Code H only)	28

2. Flameproof Transmitter Only (no seals)

Process Connection	Sensor	Sensor Fill Fluid	Connection Type	
316L ss	316L ss	Silicone	½ NPT External Thread, ¼ NPT Internal Thread	52
316L ss	316L ss	Fluorinert	½ NPT External Thread, ¼ NPT Internal Thread	53
316L ss	Hastelloy C	Silicone	½ NPT External Thread, ¼ NPT Internal Thread	60
316L ss	Hastelloy C	Fluorinert	½ NPT External Thread, ¼ NPT Internal Thread	61
Hastelloy C	Hastelloy C	Silicone	½ NPT External Thread, ¼ NPT Internal Thread	62
Hastelloy C	Hastelloy C	Fluorinert	½ NPT External Thread, ¼ NPT Internal Thread	63

3. Transmitter with Sanitary Connection(1)

Process Connection	Sensor	Sensor Fill Fluid	Connection Type	
316L ss	316L ss	NEOBEE M-20	1.5-in Tri-Clamp	TA
316L ss	316L ss	NEOBEE M-20	2.0-in Tri-Clamp	T2
316L ss	316L ss	NEOBEE M-20	3.0-in Tri-Clamp	T3
316L ss	Hastelloy C276	NEOBEE M-20	1.5-in Tri-Clamp	TB
316L ss	Hastelloy C276	NEOBEE M-20	2.0-in Tri-Clamp	T4
316L ss	Hastelloy C276	NEOBEE M-20	3.0-in Tri-Clamp	T5
316L ss	316L ss	NEOBEE M-20	Mini Tank Spud Type, 1½ in extension	M1
316L ss	316L ss	NEOBEE M-20	Mini Tank Spud Type, 6-in extension	M6
316L ss	316L ss	NEOBEE M-20	Mini Tank Spud Type, 9-in extension	M9
316L ss	316L ss	NEOBEE M-20	1-in Threaded Spud Type	PX
316L ss	316L ss	NEOBEE M-20	1.5-in Threaded Spud Type	PZ

4. Transmitter with Pulp & Paper Connection(1)

Process Connection	Sensor	Sensor Fill Fluid	Connection Type	
316L ss	316L ss	Silicone	Sleeve Type, 1 inch nominal	PA
316L ss	316L ss	Silicone	Threaded Type, 1 inch nominal	PB
316L ss	316L ss	Silicone	Sleeve Type, 1½ inch nominal	PC
316L ss	316L ss	Silicone	Threaded Type, 1½ inch nominal	PD
316L ss	Hastelloy C276	Silicone	Sleeve Type, 1 inch nominal	PE
316L ss	Hastelloy C276	Silicone	Threaded Type, 1 inch nominal	PF
316L ss	Hastelloy C276	Silicone	Sleeve Type, 1½ inch nominal	PG
316L ss	Hastelloy C276	Silicone	Threaded Type, 1½ inch nominal	PH
316L ss	Hastelloy C276	Silicone	Threaded Type, 1½ inch nominal (fits Ametek spud)	PJ

5. Transmitter Prepared for Foxboro Model Coded Seals(2)

Transmitter Prepared for Foxboro Direct Connect Seal; Silicone Fill in Sensor(3)	D1
Transmitter Prepared for Foxboro Direct Connect Seal; Fluorinert Fill in Sensor(3)	D2
Transmitter Prepared for Foxboro Remote Mount Seal; Silicone Fill in Sensor(4)	S3
Transmitter Prepared for Foxboro Remote Mount Seal; Fluorinert Fill in Sensor(4)	S4

6. Transmitters Prepared for non-Foxboro Seals

Transmitter Prepared for Remote Seal; Silicone Fill in Sensor	SC
Transmitter Prepared for Remote Seal; Fluorinert Fill in Sensor	SD

7. Flameproof Transmitter Prepared for Foxboro Model Coded Seals(2)

Flameproof Transmitter Prepared for Direct Connect Seal; Silicone Fill in Sensor(3)	D5
Flameproof Transmitter Prepared for Direct Connect Seal; Fluorinert Fill in Sensor(3)	D6
Flameproof Transmitter Prepared for Remote Mount Seal; Silicone Fill in Sensor(4)	S5
Flameproof Transmitter Prepared for Remote Mount Seal; Fluorinert Fill in Sensor(4)	S6

8. Flameproof Transmitter Prepared for non-Foxboro Seals

Flameproof Transmitter Prepared for Remote Seal; Silicone Fill in Sensor	SH
Flameproof Transmitter Prepared for Remote Seal; Fluorinert Fill in Sensor	SJ

Span Limits

KPa	inH_2O	mbar	
0.87 and 50	3.5 and 200	8.7 and 500 (available with Sanitary and Pulp & Paper Stucture Codes)	B
Mpa	**psi**	**bar or kg/cm²**	
0.007 and 0.21	1 and 30	0.07 and 2.1	C
0.07 and 2.1	10 and 300	0.7 and 21	D
0.7 and 21	100 and 3000	7 and 210	E
14 and 42	2000 and 6000	140 and 420	F
17 and 52	2500 and 7500	175 and 525 (available with Structure Codes 24 and 26 only)	K
35 and 105	5000 and 15 000	350 and 1050 (available with Structure Codes 24 and 26 only)	G
70 and 210	10 000 and 30 000	700 and 2100 (available with Structure Code 28 only)	H

Conduit Connection and Housing Material

1/2 NPT Conduit Connections, Aluminum Housing	1
PG 13.5 Conduit Connections, Aluminum Housing	2
1/2 NPT Conduit Connections, 316 ss Housing	3
PG 13.5 Conduit Connections, 316 ss Housing	4
M20 Conduit Connection, Both Sides, Aluminum Housing	5
M20 Conduit Connection, Both Sides, 316 ss Housing	6

Electrical Safety (See PSS for Description and Restrictions)

ATEX II GD, EEx ia IIC, or II ½ GD, EEx ib IIC	E
ATEX Flameproof; II 2 GD, EEx d IIC, Zone 1	D
ATEX II 3 GD, EEx nL IIC	N
ATEX Multiple Certifications (E and N)	M
ATEX Multiple Certifications (E, D, and N)	P
CSA Certified	C
CSA Certified (including Flameproof Zones)	B
FM Approved	F
FM Approved (including Flameproof Zones)	G

IECEx Intrinsically Safe, Ex ia IIC T4	T
IECEx Intrinsically Safe, Protection n; Ex nL IIC T4	U

Optional Selections

Mounting Bracket Set–Specify Only One

Painted Steel Bracket with Plated Steel Bolts (for Conduit Connection Codes 1 and 3)	-M1
Stainless Steel Bracket with Stainless Steel Bolts (for Conduit Connection Codes 1 and 3)	-M2
Painted Steel Bracket with Plated Steel Bolts (for Conduit Connection Codes 2 and 4)	-M3
Stainless Steel Bracket with Stainless Steel Bolts (for Conduit Connection Codes 2 and 4)	-M4
Painted Steel Bracket with Plated Steel Bolts for use with M20 (for Conduit Connection Codes 5 & 6)	-M5
Stainless Steel Bracket with Stainless Steel Bolts for use with M20 (for Conduit Connection Codes 5 and 6)	-M6

Digital Indicator with Pushbuttons–Specify Only One

Digital Indicator, Pushbuttons, and Window Cover for IGP10-D, -T, and -F only(5)	-L1
Blind (solid) cover over the std. LCD on -A or -V	-L2

Conduit Thread Adapters – Specify Only One

Hawk-Type ½ NPT Cable Gland for use with Conduit Connection Codes 1 & 3	-A1
Plastic PG 13.5 Connector for use with Conduit Connection Codes 2 & 4	-A2
M20 Connector for use with Conduit Connection Codes 1 & 3	-A3
Trumpet shaped PG 13.5 Cable Gland (Nickel Plated Brass) for use with Conduit Connection Codes 2 & 4	-A4

Vent Screw and Block & Bleed Valve – Specify Only One

Vent screw in process connection	-V1
Block and Bleed Valve–carbon steel	-V2
Block and Bleed Valve–316 ss	-V3
Block and Bleed Valve–316 ss body w/Monel trim	-V4

Electronic Housing Features – Specify Only One

External Zero Adjustment	-Z1
Custody Transfer Lock & Seal	-Z2
External Zero Adjustment and Custody Transfer Lock & Seal	-Z3

Factory Configuration – Specify Only One

Digital Output (FoxCom only)	-C1
Full Factory Configuration (Requires configuration form)	-C2

Instruction Book Options

Without Instruction Book & CD	-K1

Process Connection

G ½ Form B, External Thread(6)	-G
Autoclave F-250-C (with Span Limit Codes G & K only, standard with Span Code H)	-G1
½ NPT External Thread (with Span Codes G & K)	-G2

Cleaning and Preparation

Unit Degreased – for Silicone Filled Sensors Only Not for Oxygen/Chlorine Service, Option -V1, or Pressure Seals	-X1
Cleaned and Prepared for Oxygen Service – for Fluorinert Filled Sensors Only Not with Option -V1, or Pressure Seals	-X2
Cleaned and Prepared for Chlorine Service – with Structure Code 33 or 63 Only Not with Option -V1, or Pressure Seals	-X3

Miscellaneous Optional Selections

G ½ B Manometer Process Connection	-G
R ½ Process Connection (½ NPT to R ½ Adapter)	-R
Five-Year Warranty	-W
Supplemental Customer Tag	-T
Low Temperature Operative Limit of -50°C (-58°F) for Entire Transmitter	-J

Specify calibrated range.

Specify information for instrument tag.

Notes:
1 Refer to Section "Pressure Seals and Industry-Specific Connections" for additional information.
2 Both transmitters and pressure seal model codes are required.
3 Direct connect seal models that may be specified are PSTAD, PSFAD, and PSISD.
4 Remote mount seal models that may be specified are PSFPS, PSFES, PSFAR, PSTAR, PSISR, PSSCR, and PSSSR.
5 Standard equipment in IGP10, -A, and -V.
6 Not available with Span Code H.

IGP20 I/A Series®
Intelligent Gauge Pressure Transmitters

- Choice of Mounting Styles
  - ✔ *IGP20, bracket mounted, for lower ranges, more material options, vacuum measurement.*
- Rugged & Dependable
  - ✔ *Field-proven silicon strain gauge technology*
  - ✔ *Corrosion-resistant epoxy finish*
- Superior Performance
  - ✔ *Accuracy to ±0.05% of span*
  - ✔ *Ambient temperature effects to ±(0.03% URL+0.06%) span per 28°C (50°F)*
- Choice of Electronics Modules
  - ✔ *Intelligent HART, Foundation Fieldbus, Profibus, FoxCom, and 4-20 mA versions*
  - ✔ *Economical 4-20 mA and 1 to 5 Vdc versions*
- LCD Indicator/Pushbutton Configurator
  - ✔ *Optional on Foundation Fieldbus, Profibus, FoxCom/4-20 mA, and HART/4-20 versions; Standard on 4-20 mA and 1 to 5 Vdc versions*
- Standard Warranty 5 Years

Functional Specifications

Sensor Temperature Limits:
DC200: -46 & +121°C (-50° + 250°F)
FC77: -29 & +85°C (-20 & +185°F)

Ambient Temperature Limits:
DC200: -40 +85°C (-40 & +185°F)
FC77: -29 & +85°C (-20 & +185°F)

Electrical Classification: Various agency certifications for Zone and Division hazardous locations. Refer to Product Specification sheets for complete specifications.

This transmitter measures gauge pressure and transmits a 4-20 mA, 1 to 5 Vdc, or digital output signal over a pair of wires.

For complete specifications, refer to Product Specification Sheets PSS 2A-1C13 A, B, C, D, E, and J.

Output signal and configuration:

Version	Output Choices	Configure From
-D	✔ FoxCom Digital ✔ FoxCom/4 to 20 mA	✔ I/A Series Workstation ✔ Hand-Held Terminal ✔ Personal Computer ✔ Optional Pushbuttons
-T	✔ HART/4 to 20mA	✔ Communicator ✔ Workstation ✔ Personal Computer
-F	✔ Foundation Fieldbus	✔ Workstation
-A,	✔ 4 to 20mA	✔ Standard Pushbuttons
-V	✔ 1-5 Vdc	✔ Standard Pushbuttons

Span, Range and Overrange Limits:
Bracket Mounted Gauge Pressure IGP20

Span Limits Code	Span Limits		
A	0.12 & 7.5 kPa	0.5 & 30 H_20	1.2 & 75 mbar
B	0.87 & 50 kPa	0.125 & 7 psi	8.7 & 500 mbar
C	7.0 & 210 kPa	1.0 & 30 psi	70 & 2100 mbar
D	0.07 & 2.1 MPa	10 & 300 psi	0.7 & 21 bar
E	0.70 & 21 MPa	100 & 3000 psi	7 & 210 bar

Span Limits Code	Range Limits(1)		
A	-7.5 & +7.5 kPa	-30 & +30 H_20	-0.075 & +0.075 bar or kg/ cm^2
B	-50 & +50 kPa	-7 & +7 psi	-0.5 & +0.5 bar or kg/cm^2
C	-100 & +210 kPa	-14.7 & +30 psi	-1 & +2.1 bar or kg/cm^2
D	-0.1 & 2.1 MPa	-14.7 & +300 psi	-1 & +21 bar or kg/cm^2
E	-0.1 & 21 MPa	-14.7 & +3000 psi	-1 & +210 bar or kg/cm^2

Maximum Overrange (absolute)			
	Overrange Pressure Rating		
Transmitter Configuration (See Model Code for Description of Options)	MPa	psi	bar or kg/cm^2
Standard or with Option -B2, -D3, or -D7	25	3625	250
With Option -B3	20	2900	200
With Option -D1	16	2320	160
With Option -B1 or -D5	15	2175	150
With Option -D2, -D4, -D6, or -D8	10	1500	100
With Structure Codes 78 and 79 (pvdf insert)	2.1	300	21

Performance Specifications

Accuracy (Includes Linearity, Hysteresis, and Repeatability):

Version	Output	Signal Accuracy in % of Calib. Span
-D or -T	Digital	±0.05
	4 to 20 mA	±0.075
-F	Digital	±0.05
-A	4 to 20 mA	±0.20
-V	1 to 5 Vdc	±0.10
Refer to PSSs for accuracies at small spans (less than 10% of URL).		

Physical Specifications

Material Combination & Value Package: Refer to "How To Order" for material versions available. For exceptional value and corrosion resistance, the standard material combination with the lowest price is 316 ss Hi-Side Process Cover with 316L ss Sensor.

Sensor Fill Fluid: Dow Corning dimethylsiloxane (DC 200) or fluorinated hydrocarbon (3M Fluorinert FC77), as specified.

Enclosure Classification: Meets IEC IP66 & NEMA Type 4X.

How to Order – Specify Model IGP20

Electronics Versions and Output Signal

4-20 mA/FoxCom	D
4 to 20 mA/HART	T
Foundation Fieldbus	F
4 to 20 mA	A
1 to 5 V dc	V

Structure Code – Select from one of the following three groups

1. Transmitter

Hi-Side Process Cover	Sensor	Sensor Fill Fluid	
Steel	Co-Ni-Cr	Silicone	10
Steel	Co-Ni-Cr	Fluorinert	11
Steel	316L ss	Silicone	12
Steel	316L ss	Fluorinert	13
Steel	Hastelloy C	Silicone	16
Steel	Hastelloy C	Fluorinert	17
316 ss	Co-Ni-Cr	Silicone	20
316 ss	Co-Ni-Cr	Fluorinert	21
316 ss	316L ss	Silicone	22
316 ss	316L ss	Fluorinert	23
316 ss	316L ss, Gold Plated	Silicone	2G
316 ss	Monel	Silicone	24
316 ss	Monel	Fluorinert	25
316 ss	Hastelloy C	Silicone	26
316 ss	Hastelloy C	Fluorinert	27
Monel	Monel	Silicone	34
Monel	Monel	Fluorinert	35
Hastelloy C	Hastelloy C	Silicone	46
Hastelloy C	Hastelloy C	Fluorinert	47
Hastelloy C	Tantalum	Silicone	48
Hastelloy C	Tantalum	Fluorinert	49
pvdf Insert (Kynar®)	Tantalum	Silicone (used with Process Connector Type 7 below)	78
pvdf Insert (Kynar)	Tantalum	Fluorinert (used with Process Connector Type 7 below)	79

2. Transmitter Prepared for Foxboro Model Coded Seals(2)

Transmitter Prepared for Foxboro Direct Connect Seal; Silicone Fill in Sensor(3)	F1
Transmitter Prepared for Foxboro Direct Connect Seal; Fluorinert Fill in Sensor(3)	F2
Transmitter Prepared for Foxboro Remote Mount Seal; Silicone Fill in Sensor(4)	S3
Transmitter Prepared for Foxboro Remote Mount Seal; Fluorinert Fill in Sensor(4)	S4

3. Transmitter Prepared for non-Foxboro Seals

Transmitter Prepared for Remote Seal; Silicone Fill in Sensor	SC
Transmitter Prepared for Remote Seal; Fluorinert Fill in Sensor	SD

Span Limits

kPa	psi	mbar	inH_2O	
0.12 and 7.5	–	1.2 and 75	0.5 and 30	A
0.87 and 50	0.125 and 7	8.7 and 500	3.5 and 200	B
7 and 210	1 and 30	70 and 2100	28 and 840	C

MPa	psi	bar or kg/cm^2	
0.07 and 2.1	10 and 300	0.70 and 21	D
0.70 and 21	100 and 3000	7.0 and 210 (not with Structure Code 78/79 above)	E

Process Connector Type (Material Same as Process Cover Material)

None, Covers Tapped for 1/4 NPT	0
¼ NPT	1
½ NPT	2
Rc ¼	3
Rc ½	4
½ Schedule 80 Welding Neck	6
None, pvdf (Kynar) insert tapped for ½ NPT (used with Structure Codes 78 & 79)	7

Conduit Connection and Housing Material

½ NPT Conduit Connections, Aluminum Housing	1
PG 13.5 Conduit Connections, Aluminum Housing	2
½ NPT Conduit Connections, 316 ss Housing	3
PG 13.5 Conduit Connections, 316 ss Housing	4
M20 Conduit Connection, Both Sides, Aluminum Housing	5
M20 Conduit Connection, Both Sides, 316 ss Housing	6

Electrical Safety (See PSS for Description and Restrictions)

ATEX II GD, EEx ia IIC, or II 1/2 GD, EEx ib IIC	E
ATEX Flameproof; II 2 GD, EEx d IIC, Zone 1	D
ATEX II 3 GD, EEx nL IIC	N
ATEX Multiple Certifications (E, D, and N)	M
CSA Certified	C
CSA Certified (including Flameproof Zones)	B
FM approved	F
FM approved (including Flameproof Zones)	G
IECEx Intrinsically Safe, Ex ia IIC T4	T
IECEx Intrinsically Safe, Protection n; Ex nL IIC T4	U

Optional Selections

Mounting Bracket Set—Specify Only One

Painted Steel Bracket with Plated Steel Bolts	-M1
Stainless Steel Bracket with Stainless Steel Bolts	-M2
Universal Stainless Steel Bracket with Stainless Steel Bolts	-M3

Indicator with Internal Pushbuttons

Digital Indicator, Pushbuttons, and Window Cover for IGP20-D, -T, -P, and -F only(5)	-L1
Blind (solid) cover over the std. LCD on -A, or -V	-L2

DIN 19213 Construction—Specify Only One and Specify Process Connector Code 0

Single Ended Process Cover with M10 Bolting	-D1
Double Ended Process Cover with M10 Bolting (Blind Kidney Range on Back)	-D2
Single Ended Process Cover with 7/16 inch Bolting	-D3
Double Ended Process Cover with 7/16 inch Bolting (Blind Kidney Flange on Back)	-D4
Single Ended Process Covers with 316 ss 7/16 inch Bolting	-D5
Double Ended Process Covers with 316 ss 7/16 inch Bolting (Blind Kidney Flange on Back)	-D6
Single Ended Process Covers with 17-4 ss 7/16 inch Bolting	-D7
Double Ended Process Covers with 17-4 ss 7/16 inch Bolting (Blind Kidney Flange on Back)	-D8

Cleaning and Preparation—Specify Only One

Unit Degreased (not for Oxygen/Chlorine Service)(6)	-X1
Cleaned and Prepared for Oxygen Service(7)	-X2
Cleaned and Prepared for Chlorine Service(7)	-X3

Bolting for Process Covers and Process Connectors – Specify Only One

316 ss Bolts and Nuts (Maximum Static Pressure 150 bar or kg/cm^2, 2175psi)	-B1
17-4 ss Bolts and Nuts	-B2
B7M Bolts and Nuts (NACE) (Pressure de-rated, refer to table)	-B3

Conduit Thread Adapters – Specify Only One

Hawk-Type ½ NPT Cable Gland for use with Conduit Connection Codes 1 & 3	-A1
Plastic PG 13.5 Connector for use with Conduit Connection Codes 2 & 4	-A2
M20 Connector for use with Conduit Connection Codes 1 & 3	-A3
Trumpet shaped PG 13.5 Cable Gland (Nickel Plated Brass) for use with Conduit Connection Codes 2 & 4	-A4

Electronic Housing Features–Specify Only One

External Zero Adjustment	-Z1
Custody Transfer Lock & Seal	-Z2
External Zero Adjustment and Custody Transfer Lock & Seal	-Z3

Ermeto Connectors–Specify Only One

Steel, Connecting 6 mm Tubing to ¼ NPT Process Connector	-E1
Steel, Connecting 12 mm Tubing to ½ NPT Process Connector	-E2
316 ss, Connecting 6 mm Tubing to ¼ NPT Process Connector	-E3
316 ss, Connecting 12 mm Tubing to ½ NPT Process Connector	-E4

Factory Configuration–Specify Only One

Digital Output (FoxCom only)	-C1
Full Factory Configuration (Requires Configuration Form)	-C2

Instruction Book Options

Without Instruction Book & CD	-K1

Miscellaneous Optional Selections

Vent Screw In Side of Process Cover	-V
Five-Year Warranty	-W
Supplemental Customer Tag	-T
Low Temperature Operative Limit of -50°C (-58°F) for Entire Transmitter	-J
Gasket for Vacuum Service with Pressure Seals[8]	-G1

Specify calibrated range

Specify information for instrument tag

Notes

1 Upper Range Limit is the lower of the values in this table and in the Maximum Overrange Table, which lists the de-rated pressures associated with various options.
2 Refer to Section "Pressure Seals and Industry-Specific Connections" for additional information.
3 Direct Mount seals that may be specified are models PSFLT, PSSCT, and PSSST.
4 Remote Mount seals that may be specified are models PSFPS, PSFES, PSFAR, PSTAR, PSISR, PSSCR, and PSSSR.
5 Standard equipment on IGP20-A, and -V.
6 Available only with Structure Codes having Silicone Fill Fluid.
7 Available only with Structure Codes having Fluorinert Fill Fluid and not available with carbon steel Process Cover.
8 Option -G1 is required when pressure seal (Structure Codes S3, S4, F1, F2, SC, or SD) will be used on vacuum applications. This option substitutes a vacuum service gasket for the standard ptfe Process Cover gasket.

IGP25 I/A Series® Multirange Pressure Transmitter for Gauge Pressure Transmitters

This intelligent two-wire transmitter provides precise, reliable measurement of gauge pressure providing the adjustment range of "two transmitters in one."

For complete specifications refer to product specification sheet PSS 2A-1C13G, M, and N.

- Features:
  - *400:1 turndown span adjustment*
  - *Wide measurement ranges from 0-3.5 kPa to 0-14 MPa (0-0.5 to 0-2000 psi) with just two sensor selections*
  - *Process wetted parts all 316L ss*
  - *Available with 4-20 mA output and, HART, or Foundation Fieldbus digital communications*
- Benefits:
  - *Multirange transmitter simplifies planning, ordering and spares procurement and stocking*
  - *High reliability*
  - *All welded sensor, no gaskets — minimized chance of fugitive emissions*
- Standard Warranty 5 Years
- Performance Specs:
  - *Accuracy: ±0.075% of span for 120:1 turndown*
  - *Small span accuracy: ±(0.000625) (URL/span)% span for turndowns >120:1*
  - *Temperature effects: ±(0.03% URL + 0.06% span)/28°C (50°F)*
- Electrical Classification:
  - *Various agency certifications for Zone and Division hazardous locations. Refer to Product Specification Sheets for complete specifications.*

Functional Specifications

Span and Range Limits

Span Limits Code	Span Limits			Range Limits		
	MPa	psi	bar or kg/cm²	MPa	psi	bar or kg/cm²
D	0.0035 and 1.4	0.5 and 200	0.035 and 14	0 and 1.4	0 and 200	0 and 14
E	0.035 and 14	5 and 2000	0.35 and 140	0 and 14	0 and 2000	0 and 140

How to Order – Specify Model Number IGP25

Electronics Versions and Output Signal

4 to 20 mA/HART . . . . . -T
Foundation Fieldbus . . . . . -F

Structure Code – Select from one of the following eight groups:

1. Transmitter Only (no seals)

Process Connection	Sensor	Fill Fluid	Connection Type	
316L ss	316L ss	Silicone	½ NPT External Thread, ¼ NPT Internal Thread	22
316L ss	316L ss	Fluorinert	½ NPT External Thread, ¼ NPT Internal Thread	23

2. Flameproof Transmitter Only (no seals)

Process Connection	Sensor	Sensor Fill Fluid	Connection Type	
316L ss	316L ss	Silicone	½ NPT External Thread, ¼ NPT Internal Thread	52
316L ss	316L ss	Fluorinert	½ NPT External Thread, ¼ NPT Internal Thread	53

3. Transmitter with Sanitary Connection(1)

Process Connection	Sensor	Sensor Fill Fluid	Connection Type	
316L ss	316L ss	NEOBEE M-20	1.5-in Tri-Clamp	TA
316L ss	316L ss	NEOBEE M-20	2.0-in Tri-Clamp	T2
316L ss	316L ss	NEOBEE M-20	3.0-in Tri-Clamp	T3
316L ss	Hastelloy C276	NEOBEE M-20	1.5-in Tri-Clamp	TB
316L ss	Hastelloy C276	NEOBEE M-20	2.0-in Tri-Clamp	T4
316L ss	Hastelloy C276	NEOBEE M-20	3.0-in Tri-Clamp	T5
316L ss	316L ss	NEOBEE M-20	Mini Tank Spud Type, 1½ in extension	M1
316L ss	316L ss	NEOBEE M-20	Mini Tank Spud Type, 6 in extension	M6
316L ss	316L ss	NEOBEE M-20	Mini Tank Spud Type, 9 in extension	M9
316L ss	316L ss	NEOBEE M-20	1 in Threaded Spud Type	PX
316L ss	316L ss	NEOBEE M-20	1.5 in Threaded Spud Type	PZ

4. Transmitter with Pulp & Paper Connection(1)

Process Connection	Sensor	Sensor Fill Fluid	Connection Type	
316L ss	316L ss	Silicone	Sleeve Type, 1 inch nominal	PA
316L ss	316L ss	Silicone	Threaded Type, 1 inch nominal	PB
316L ss	316L ss	Silicone	Sleeve Type, 1½ inch nominal	PC
316L ss	316L ss	Silicone	Threaded Type, 1½ inch nominal	PD
316L ss	Hastelloy C276	Silicone	Sleeve Type, 1 inch nominal	PE
316L ss	Hastelloy C276	Silicone	Threaded Type, 1 inch nominal	PF
316L ss	Hastelloy C276	Silicone	Sleeve Type, 1½ inch nominal	PG
316L ss	Hastelloy C276	Silicone	Threaded Type, 1½ inch nominal	PH
316L ss	Hastelloy C276	Silicone	Threaded Type, 1½ inch nominal (fits Ametek spud)	PJ

5. Transmitter Prepared for Foxboro Model Coded Seals(2)

Transmitter Prepared for Foxboro Direct Connect Seal; Silicone Fill in Sensor(3)	D1
Transmitter Prepared for Foxboro Direct Connect Seal; Fluorinert Fill in Sensor(3)	D2
Transmitter Prepared for Foxboro Remote Mount Seal; Silicone Fill in Sensor(4)	S3
Transmitter Prepared for Foxboro Remote Mount Seal; Fluorinert Fill in Sensor(4)	S4

6. Transmitters Prepared for non-Foxboro Seals

Transmitter Prepared for Remote Seal; Silicone Fill in Sensor	SC
Transmitter Prepared for Remote Seal; Fluorinert Fill in Sensor	SD

7. Flameproof Transmitter Prepared for Foxboro Model Coded Seals(2)

Flameproof Transmitter Prepared for Direct Connect Seal; Silicone Fill in Sensor(3)	D5
Flameproof Transmitter Prepared for Direct Connect Seal; Fluorinert Fill in Sensor(3)	D6
Flameproof Transmitter Prepared for Remote Mount Seal; Silicone Fill in Sensor(4)	S5
Flameproof Transmitter Prepared for Remote Mount Seal; Fluorinert Fill in Sensor(4)	S6

8. Flameproof Transmitter Prepared for non-Foxboro Seals

Flameproof Transmitter Prepared for Remote Seal; Silicone Fill in Sensor	SH
Flameproof Transmitter Prepared for Remote Seal; Fluorinert Fill in Sensor	SJ

Span Limits

MPa	psi	bar or kg/cm^2	
0.0035 and 1.4	0.5 and 200	0.035 and 14	D
0.035 and 14	5 and 2000	0.35 and 140	E

Conduit Connections and Housing Material

½ NPT Conduit Connections, Aluminum Housing	1
PG 13.5 Conduit Connections, Aluminum Housing	2
½ NPT Conduit Connections, 316 ss Housing	3
PG 13.5 Conduit Connections, 316 ss Housing	4
M20 Conduit Connection, Both Sides, Aluminum Housing	5
M20 Conduit Connection, Both Sides, 316 ss Housing	6

Electrical Safety (See PSS for Description and Restrictions)

ATEX II GD, EEx ia IIC, or II ½ GD, EEx ib IIC	E
ATEX Flameproof; II 2 GD, EEx d IIC, Zone 1	D
ATEX II 3 GD, EEx nL IIC	N
ATEX Multiple Certifications (E and N)	M
ATEX Multiple Certifications (E, D, and N)	P
CSA Certified	C
CSA Certified (including Flameproof Zones)	B
FM Approved	F
FM Approved (including Flameproof Zones)	G
IECEx Intrinsically Safe, Ex ia IIC T4	T
IECEx Intrinsically Safe, Protection n; Ex nL IIC T4	U

Optional Selections

Mounting Bracket Set – Specify Only One

Painted Steel Bracket with Plated Steel Bolts (for Conduit Connection Codes 1 and 3)	-M1
Stainless Steel Bracket with Stainless Steel Bolts (for Conduit Connection Codes 1 and 3)	-M2
Painted Steel Bracket with Plated Steel Bolts (for Conduit Connection Codes 2 and 4)	-M3
Stainless Steel Bracket with Stainless Steel Bolts (for Conduit Connection Codes 2 and 4)	-M4
Painted Steel Bracket with Plated Steel Bolts for use with M20 (for Conduit Connection Codes 5 & 6)	-M5
Stainless Steel Bracket with Stainless Steel Bolts for use with M20 (for Conduit Connection Codes 5 and 6)	-M6

Cleaning and Preparation – Specify Only One

Unit Degreased (Silicone filled sensor-not for Oxygen, Chlorine, or other fluids that react with silicone)	-X1
Cleaned and prepared for Oxygen service (available only with structure codes having Fluorinert fill fliud	-X2

Digital Indicator with Pushbuttons

Digital Indicator, Pushbuttons, and Window Cover	-L1

Block & Bleed Valve – Specify Only One

Block and Bleed Valve, Carbon Steel	-V2
Block and Bleed Valve, 316 ss	-V3
Block and Bleed Valve, 316 ss Body w/Monel Trim	-V4

Conduit Thread Adapters – Specify Only One

Hawk-Type ½ NPT Cable Gland for use with Conduit Connection Codes 1 & 3	-A1
Plastic PG 13.5 Connector for use with Conduit Connection Codes 2 & 4	-A2
M20 Connector for use with Conduit Connection Codes 1 & 3	-A3
Trumpet shaped PG 13.5 Cable Gland (Nickel Plated Brass) for use with Conduit Connection Codes 2 & 4	-A4

Electronics Housing Features – Specify Only One

External Zero Adjustment	-Z1
Custody Transfer Lock and Seal	-Z2
External Zero Adjustment and Custody Transfer Lock and Seal	-Z3

Custom Factory Configuration

Full Factory Configuration (Requires Configuration Form to be filled out)	-C2

Instruction Book Options

Without Instruction Book & CD	-K1

Miscellaneous Optional Selections

R ½ Process Connection (½ NPT to R ½ Adapter)	-R
Five-Year Warranty	-W
Supplemental Customer Tag	-T
Low Temperature Operative Limit of -50°C (-58°F) for Entire Transmitter	-J

Notes

1 Refer to Section "Pressure Seals and Industry-Specific Connections" for additional information.
2 Direct Mount seals that may be specified are models PSTAD, PSFAD, and PSISD.
3 Remote Mount seals that may be specified are models PSFPS, PSFES, PSFAR, PSTAR, PSISR, PSSCR, and PSSSR.

IGP50 I/A Series® Premium Performance Transmitter for Gauge Pressure Measurement

This intelligent, premium performance, two-wire transmitter provides precise, reliable measurement of gauge pressure with extremely low total probable error (TPE).

For complete specifications refer to product specification sheet PSS 2A-1C13 H.

- Features:
  - *Wide measurement range from 0-0.017 to 0-14 MPa (0-2.5 to 0-2000 psi) with just two sensor selections*
  - *High accuracy and low total probable error*
  - *Available with 4-20 mA output and HART, or Foundation Fieldbus digital communications*
- Benefits:
  - *High reliability*
  - *Improved process control*
  - *Meets most high performance application requirements*
  - *All welded sensor, no gaskets —minimized chance of fugitive emissions*
- Standard Warranty 5 Years
- Premium Performance
  - *Accuracy ±0.05% of span over full 80:1 span turndown*
  - *Long term drift ±0.02% URL per year over a 5 year period*
  - *Temperature effect ±(0.015% URL + 0.03% span)/28°C (50°F)*

Functional Specifications

Span and Range Limits

Span Limit Code	Span Limits			Range Limits (a)		
	MPa	psi	bar or kg/cm^2	MPa	psi	bar or kg/cm^2
D	0.017 and 1.4	2.5 and 200	0.17 and 14	0 and 1.4	0 and 200	0 and 14
E	0.17 and 14	25 and 2000	1.7 and 140	0 and 14	0 and 2000	0 and 140

Electrical Clasification:
Various agency certifications for Zone and Division hazardous locations. Refer to Product Specification sheets for complete specifications.

Maximum Overrange and Proof Pressure Ratings

Span Limit Code	Maximum Overrange Pressure Rating (b)		
	MPa	psi	bar or kg/cm^2
D	2.1	300	21
E	21	3000	210

(a) For high performance vacuum applications, refer to IDP50 which is rated for negative range values.
(b) Maximum overrange pressure is the maximum pressure that may be applied without causing damage to the transmitter.

How to Order – Specify Model Number IGP50

Electronics Versions and Output Signal

4 to 20 mA/HART	-T
Foundation Fieldbus	-F

Structure Code – Process Connection, Sensor, and Fill fluid

Process Connection	Sensor	Fill Fluid	
316L ss	316L ss	Silicone	22

Span Limits

MPa	psi	bar or kg/cm^2	
0.017 and 1.4	2.5 and 200	0.17 and 14	D
0.17 and 14	25 and 2000	1.7 and 140	E

Conduit Connection and Housing Material

½ NPT Conduit Connections, Aluminum Housing	1
PG 13.5 Conduit Connections, Aluminum Housing	2
½ NPT Conduit Connections, 316 ss Housing	3
PG 13.5 Conduit Connections, 316 ss Housing	4
M20 Conduit Connection, Both Sides, Aluminum Housing	5
M20 Conduit Connection, Both Sides, 316 ss Housing	6

Electrical Safety (See PSS for Description and Restrictions)

ATEX II GD, EEx ia IIC, or II ½ GD, EEx ib IIC	E
ATEX Flameproof; II 2 GD, EEx d IIC, Zone 1	D
ATEX II 3 GD, EEx nL IIC	N
ATEX Multiple Certifications (E and N)	M
ATEX Multiple Certifications (E, D, and N)	P
CSA Certified	C
CSA Certified (including Flameproof Zones)	B
FM Approved	F
FM Approved (including Flameproof Zones)	G
IECEx Intrinsically Safe, Ex ia IIC T4	T
IECEx Intrinsically Safe, Protection n; Ex nL IIC T4	U

Optional Selections

Mounting Bracket Set – Specify Only One

Painted Steel Bracket with Plated Steel Bolts (for Conduit Connection Codes 1 and 3)	-M1
Stainless Steel Bracket with Stainless Steel Bolts (for Conduit Connection Codes 1 and 3)	-M2
Painted Steel Bracket with Plated Steel Bolts (for Conduit Connection Codes 2 and 4)	-M3
Stainless Steel Bracket with Stainless Steel Bolts (for Conduit Connection Codes 2 and 4)	-M4
Painted Steel Bracket with Plated Steel Bolts for use with M20 (for Conduit Connection Codes 5 & 6)	-M5
Stainless Steel Bracket with Stainless Steel Bolts for use with M20 (for Conduit Connection Codes 5 and 6)	-M6

Cleaning and Preparation

Unit Degreased (Silicone filled sensor – not for Oxygen, Chlorine, or other fluids that may react with silicone)	-X1

Digital Indicator with Pushbuttons

Digital Indicator, Pushbuttons, and Window Cover	-L1

Block & Bleed valve – Specify Only One

Block and Bleed Valve, Carbon Steel	-V2
Block and Bleed Valve, 316 ss	-V3
Block and Bleed Valve, 316 ss Body w/Monel Trim	-V4

Conduit Connectors (Threaded Adapters) – Specify Only One

Hawke-Type 1/2 NPT Cable Gland for use with Conduit Connection Codes 1 and 3	-A1
Plastic PG 13.5 Cable Gland for use with Conduit Connection Codes 2 and 4	-A2
M20 Connector for use with Conduit Connection Codes 1 and 3	-A3
Trumpet-Shaped Nickel-plated Brass PG 13.5 Cable Gland for use with Conduit Connection Codes 2 and 4	-A4

Electronics Housing Features – Specify Only One

External Zero Adjustment	-Z1
Custody Transfer Lock and Seal	-Z2
External Zero Adjustment and Custody Transfer Lock and Seal	-Z3

Custom Factory Configuration

Full Factory Configuration (Requires Configuration Form to be filled out)	-C2

Instruction Book Options

Without Instruction Book & CD	-K1

Miscellaneous Optional Selections

R ½ Process Connection (½ NPT to R ½ Adapter)	-R
17 Year Extended Warranty	-W
Supplemental Customer Tag (Stainless Steel Tag wired onto Transmitter)	-T
Low Temperature Operative Limit of -50°C (-58°F) for Entire Transmitter	-J

IGP60 - I/A Series System Premium Performance Gauge Pressure Transmitter

The Foxboro IGP60G Gauge Pressure Transmitter is a microprocessor-based smart transmitter that provides precise, reliable, measurement of gauge pressure and features high performance and excellent stability. Capable of measuring gas, liquid, vapor, and liquid levels, it transmits 4 to 20 mA dc analog and digital signals according to the measured pressure. It can also execute two-way communications using HART protocol, thus facilitating self-diagnosis, range resetting, and automatic zero adjustment .For complete specifications, refer to Product Specification Sheet PSS 2A-1C18 B.

- Unique characterization and composite semiconductor sensors realize high accuracy up to 0.04% F.S.
- Proven Sensor technology enables Long-term stability up to 0.1% of URL per 1-year period.
- A wide measuring range is available from a single model. This feature is highly effective in taking measurement over a wide range and reducing the need for inventory.
- Measuring Span: 2.5 to 500 psi
- Rangeability 200 to 1 (17.5 to 3500kPa).
- Two-way communication using HART protocol facilitates self-diagnosis, range resetting, automatic zero adjustment, and other operations.
- HART communication protocol.

Functional Specifications

Measuring Span Limits

kPa	Psi	bar	mmHg	mmH20	InH20
17.5 and 3500	2.5 and 507.6	0.175 and 35	131 and 26252	1784 and 356900	70 and 14051

Setting Range Limits

kPa	Psi	bar	mmHg	mmH20	InH20
-100 and 3500	-14.5 and 507	-7510 and 35	-750 and 26252	-10,197 and 356900	-401 and 14501

Working Pressure Limits

kPa	Psi	bar	mmHg	mmH20	InH20
2(abs) and 5250	0.29(abs) and 761	0.02 and 52.5	15 and 39378	204 and 535351	8 and 21077

How to Order–Specify model number IGP60 followed by order code for each selection configuration

Communications
4 to 20 mA with HART Communications . . . . . B

Fill Fluid
Silicone . . . . . A
Fluorine (for Oxygen Service) . . . . . H

Material Covers
Meterbody Covers: SCS14A, Vent/Drain Plugs 316SST . . . . . A

Material Body
Meterbody: 316SST, Process Diaphragms: 316LSST. . . . . A
Meterbody, Diaphragms: ASTM B575 (Equiv. to Hastalloy C) . . . . . B

Process Connections
1/4 in NPT Internal Thread with 1/2 in NPT Adapter Flange . . . D
1/4 in NPT Internal Thread with Adapter Flange. . . . E
1/4 in NPT Internal Thread w/o Adapter Flange . . . F
Mounting (Process Installation)
Horizontal Piping, Top Connection . . . C

Bolting
304SST . . . B

Electrical Connection
1/2 in NPT, Watertight . . . A
M20, Watertight . . . B

Electrical Safety
None . . . XX
FM Explosionproof. . . . F1
FM Intrinsically Safe . . . F2
FM Nonincendive . . . F5
FM EX, IS, and NI . . . F6
ATEX Explosionproof . . . A1
ATEX Intrinsically Safe . . . A2
ATEX Energy Limited . . . A5
In Metro Flameproof . . . B1
In Metro Intrinsically Safe . . . B2
In Metro Type N . . . B3
CSA Explosionproof . . . C1
CSA Intrinsically Safe . . . C2

Indicator
None . . . X
With Indicator . . . A

Paint
Corrosion Proof . . . B

Failure Alarm Configuration
Upper Limit of Output at Abnormal Condition. . . . A
Lower Limit of Output at Abnormal Condition . . . B

Mounting Bracket
None . . . X
304 SST (Universal) . . . 1

Optional Selections
No Options . . . XX
Pitch Adjusting Adapter . . . A1
With External Zero Adjustment . . . A2
Long Vent / Drain Plug . . . G4
Side Vent / Drain Plug (Top). . . . G6
Side Vent / Drain Plug Bottom) . . . G7
Oil/ Water Free Finish . . . K1
Oil Free Finish . . . K3
Safety Transmitter. . . . Q1
NAMUR NE43 Compliant . . . Q2
Alarm Output (Contact utput) . . . Q7
Custom Calibration . . . R1
Test Report . . . T1
Mill Certificate. . . . T2
Traceability Certificate. . . . T4
NACE Certificate . . . T5
Non SI Unit . . . W1

IDP10 I/A Series® Intelligent d/p cell® Transmitters

- Application Versatility
  - *316 ss Process Covers and 316L ss Sensor materials standard*
  - *Choice of Traditional or Low Profile Process Cover/Sensor Structures*
  - *Static Pressure Rating of 25 MPa, 3625 psi, 250 bar or kg/cm²; Options to 40 MPa, 5800 psi, 400 bar or kg/cm²*
- Installation Versatility
  - *Traditional "right angle" structure with process connections in horizontal plane*
  - *Low Profile "in line" structures with process connections in verticle plane*
- Two Low Profile Structures
  - *LP1 Structure — economical, small, light weight for direct manifold mounting in vertical or horizontal positions*
  - *LP2 Structure — designed for bracket or manifold mounting in vertical position*
- Superior Performance
  - *Accuracy to ±0.05% of span*
- Choice of Electronics Modules
  - *Intelligent HART, Foundation Fieldbus, FoxCom and 4 to 20 mA versions*
  - *Economical 4 to 20 mA and 1 to 5 Vdc versions*
- LCD Indicator/Pushbutton Configurator
  - *Optional on Foundation Fieldbus, FoxCom/4-20 mA, and HART/4-20 mA versions*
  - *Standard on 4-20 mA and 1-5 Vdc versio*
- Electrical Clasification:
  - *Various agency certifications for Zone and Division hazardous locations. Refer to Product Specification sheets for complete specifications.*
- Standard Warranty 5 Years

This transmitter measures the difference between two pressures and transmits a proportional or square root (flow) 4-20mA, 1-5Vdc, or digital output signal over a pair of wires.

For complete specifications, refer to Product Specification Sheet PSS 2A-1C14 A, B, & C, and PSS 2A-1C13 D, E, and J.

Output signal and configuration:

Version	Output Choices	Configure From
-D	✔ FoxCom Digital ✔ FoxCom/4 to 20 mA	✔ I/A Series Workstation ✔ Hand-Held Terminal ✔ Personal Computer ✔ Optional Pushbuttons
-T	✔ HART/ 4 to 20mA	✔ Communicator ✔ Workstation ✔ Personal Computer
-F	✔ Foundation Fieldbus	✔ Workstation
-A,	✔ 4 to 20mA	✔ Standard Pushbuttons
-V	✔ 1-5 Vdc	✔ Standard Pushbuttons

Span and Range Limits:

Span Limits Code	Span Limits		
A	0.12 & 7.5 kPa	0.5 & 30 inH_2O	1.2 & 75 mbar
B	0.87 & 50 kPa	3.5 & 200 inH_2O	8.7 & 500 mbar
C	7 & 210 kPa	28 & 840 inH_2O	70 & 2100 mbar
D	0.07 & 2.1 MPa	10 & 300 psi	0.7 & 21 bar or kg/cm²
E	0.7 & 21 MPa	100 & 3000 psi	7 & 210 bar or kg/cm²

	Range Limits(1)		
A	-7.5 & +7.5 kPa	-30 & +30 inH_2O	-75 & +75 mbar
B	-50 & +50 kPa	-200 & +200 inH_2O	-500 & +500 mbar
C	-210 & +210 kPa	-840 & +840 inH_2O	-2100 & +2100 mbar
D	-0.21 & +2.1 MPa	-30 & +300 psi	-2.1 & +21 bar or kg/cm²
E	-0.21 & +21 MPa	-30 & 3000 psi	-2.1 & +210 bar or kg/cm²

Maximum Static and Overrange Pressures

Transmitter Configuration (See Model Code for Description of Options)	Pressure Rating		
	MPa	psi	bar or kg/cm²
Standard or with Option -B2, -D3, or -D7	25	3625	250
With Option -B3	20	2900	200
With Option -D1	16	2320	160
With Option -B1 or -D5	15	2175	150
With Option -D2, -D4, -D6, or -D8	10	1500	100
With Structure Codes 78 and 79 (pvdf insert)	2.1	300	21
With Option -D9 or -Y	40	5800	400

Performance Specifications

Accuracy (Includes Linearity, Hysteresis, and Repeatability):

Version	Output	Signal Accuracy in % of Calib. Span
-D or -T	Digital	±0.05
	4 to 20 mA	±0.075
-F	Digital	±0.05
-A	4 to 20 mA	±0.20
-V	1 to 5 Vdc	±0.10
Refer to PSSs for accuracies at small spans (less than 10% of URL) and with square root output		

Physical Specifications

Material Combination & Value Package: Refer to How To Order for material versions available. For exceptional value and corrosion resistance, the standard material combination with the lowest price is 316 ss Process Covers with 316L ss Sensor.

Enclosure Classification: Meets IEC IP66 and NEMA Type 4X.

Sensor Fill Fluid: Dow Corning dimethylsiloxane (DC 200) or fluorinated hydrocarbon (3M Fluorinert FC 77), as specified.

How to Order – Specify Model Number IDP10

Electronic Versions and Output Signals

4-20 mA/FoxCom	D
4 to 20 mA/HART	T
Foundation Fieldbus	F
4 to 20 mA	A
1 to 5 V dc	V

Structure Code – Select from one of the following five groups:

1. Transmitter With Traditional Structure

Process Covers	Sensor	Fill Fluid	
Steel	Co-Ni-Cr	Silicone	10
Steel	Co-Ni-Cr	Fluorinert	11
Steel	316L ss	Silicone	12
Steel	316L ss	Fluorinert	13
Steel	Hastelloy C	Silicone	16
Steel	Hastelloy C	Fluorinert	17
316 ss	Co-Ni-Cr	Silicone	20
316 ss	Co-Ni-Cr	Fluorinert	21
316 ss	316L ss	Silicone	22
316 ss	316L ss	Fluorinert	23
316 ss	316L ss, Gold Plated	Silicone	2G
316 ss	Monel	Silicone	24
316 ss	Monel	Fluorinert	25
316 ss	Hastelloy C	Silicone	26
316 ss	Hastelloy C	Fluorinert	27
Monel	Monel	Silicone	34
Monel	Monel	Fluorinert	35
Hastelloy C	Hastelloy C	Silicone	46
Hastelloy C	Hastelloy C	Fluorinert	47
Hastelloy C	Tantalum	Silicone	48
Hastelloy C	Tantalum	Fluorinert	49
pvsf Insert (Kynar)	Tantalum	Silicone (Used w/Process Connector Type 7)	78
pvsf Insert (Kynar)	Tantalum	Fluorinert (Used w/Process Connector Type 7)	79

2. Transmitter With Low Profile Structure LP1 (No Seals)

Process Covers	Sensor	Fill Fluid	
316 ss	316L ss	Silicone	LL
316 ss	316L ss	Fluorinert	LM
316 ss	Hastelloy C	Silicone	LC
316 ss	Hastelloy C	Fluorinert	LD

3. Transmitter With Low Profile Structure LP2 (No Seals)

Process Covers	Sensor	Fill Fluid	
316 ss	316L ss	Silicone	52
316 ss	316L ss	Fluorinert	53
316 ss	Hastelloy C	Silicone	56
316 ss	Hastelloy C	Fluorinert	57

4. Transmitter (Traditional Structure) Prepared for Foxboro Model Coded Seals(2)

Direct Connect Seal on HI Side; 1/2 NPT Process Connector LO Side; Silicone Fill in Sensor(3)	F1
Direct Connect Seal on HI Side; 1/2 NPT Process Connector LO Side; Fluorinert Fill in Sensor(3)	F2
Direct Connect Seal on HI Side; Remote Seal with Capilary LO Side; Silicone Fill in Sensor(3)	F3
Direct Connect Seal on HI Side; Remote Seal with Capilary LO Side; Fluorinert Fill in Sensor(3)	F4
Remote Seals on Both HI and LO Sides, Silicone Fill in Sensor(4)	S1
Remote Seals on Both HI and LO Sides, Fluorinert Fill in Sensor(4)	S2
Remote Seal HI Side, ½ NPT Connector LO Side, Silicone Fill in Sensor(4)	S3
Remote Seal HI Side, ½ NPT Connector LO Side, Fluorinert Fill in Sensor(4)	S4
Remote Seal LO Side, ½ NPT Connector HI Side, Silicone Fill in Sensor(4)	S5
Remote Seal LO Side, ½ NPT Connector HI Side, Fluorinert Fill in Sensor(4)	S6

5. Transmitter (Traditional Structure) Prepared for non-Foxboro Seals

Remote Seal on High and Low Sides; Silicone Fill in Sensor	SA
Remote Seal on High and Low Sides; Inert Fill in Sensor	SB
Remote Seal on High Side and ½ NPT Connector on Low Side, Silicone Fill in Sensor	SC
Remote Seal on High Side and ½ NPT Connector on Low Side, Inert Fill in Sensor	SD
Remote Seal on Low Side and ½ NPT Connector on High Side, Silicone Fill in Sensor	SE
Remote Seal on Low Side and ½ NPT Connector on High Side, Inert Fill in Sensor	SF

Span Limits – Differential Pressure Units

kPa	inH_2O	mbar	
0.12 and 7.5	0.5 and 30	1.2 and 75	A
0.87 and 50	3.5 and 200	8.7 and 500	B
7 and 210	28 and 840	70 and 2100	C
MPa	psi	bar or kg/cm^2	
0.07 and 2.1	10 and 300	0.7 and 21	D
0.7 and 21	100 and 3000	7 and 210	E

Process Connector Type (Material Same as Process Cover Material)

None, Covers Tapped for 1/4 NPT	0
¼ NPT	1
½ NPT	2
Rc ¼	3
Rc ½	4
½ Schedule 80 Welding Neck	6
None, pvdf (Kynar) insert tapped for ½ NPT (used with Structure Codes 78 & 79)	7

Conduit Connection and Housing Material

½ NPT Conduit Connections, Aluminum Housing	1
PG 13.5 Conduit Connections, Aluminum Housing	2
½ NPT Conduit Connections, 316 ss Housing	3
PG 13.5 Conduit Connections, 316 ss Housing	4
M20 Conduit Connection, Both Sides, Aluminum Housing	5
M20 Conduit Connection, Both Sides, 316 ss Housing	6

Electrical Safety (See PSS for Description and Restrictions)

ATEX II GD, EEx ia IIC, or II ½ GD, EEx ib IIC	E
ATEX Flameproof; II 2 GD, EEx d IIC, Zone 1	D
ATEX II 3 GD, EEx nL IIC	N
ATEX Multiple Certifications (E, D, and N)	M
CSA Certified	C
CSA Certified (including Flameproof Zones)	B
FM approved	F
FM approved (including Flameproof Zones)	G
IECEx Intrinsically Safe, Ex ia IIC T4	T
IECEx Intrinsically Safe, Protection n; Ex nL IIC T4	U

Optional Selections

Mounting Bracket Set—Specify Only One

Painted Steel Bracket with Plated Steel Bolts	-M1
Stainless Steel Bracket with Stainless Steel Bolts	-M2
Universal Stainless Steel Bracket with Stainless Steel Bolts	-M3

Indicator with Internal Pushbuttons

Digital Indicator, Pushbuttons, and Window Cover for IDP10, -T, and -F only(5)	-L1
Blind (solid) cover over the std. LCD on -A, or -V	-L2

DIN 19213 Construction – Specify Only One and Specify Process Connector Code 0

Single Ended Process Cover with M10 Bolting	-D1
Double Ended Process Cover with M10 Bolting (Blind Kidney Range on Back)	-D2
Single Ended Process Cover with 7/16 inch Bolting	-D3
Double Ended Process Cover with 7/16 inch Bolting (Blind Kidney Flange on Back)	-D4
Single Ended Process Covers with 316 ss 7/16 inch Bolting	-D5
Double Ended Process Covers with 316 ss 7/16 inch Bolting (Blind Kidney Flange on Back)	-D6
Single Ended Process Covers with 17-4 ss 7/16 inch Bolting	-D7
Double Ended Process Covers with 17-4 ss 7/16 inch Bolting (Blind Kidney Flange on Back)	-D8
Single Ended Process Covers with 17-4 ss 7/16 inch Bolting an 40 MPa (400 bar or kg/cm^2, 5800 psi) static pressure rating	-D9

Cleaning and Preparation—Specify Only One

Unit Degreased (not for Oxygen/Chlorine Service)(6)	-X1
Cleaned and Prepared for Oxygen Service(7)	-X2
Cleaned and Prepared for Chlorine Service(7)	-X3

Bolting for Process Covers and Process Connectors – Specify Only One

316 ss Bolts and Nuts (Maximum Static Pressure 150 bar or kg/cm^2, 2175psi)	-B1
17-4 ss Bolts and Nuts	-B2
B7M Bolts and Nuts (NACE) (Pressure de-rated, refer to table)	-B3

Conduit Thread Adapters – Specify Only One

Hawk-Type ½ NPT Cable Gland for use with Conduit Connection Codes 1 & 3	-A1
Plastic PG 13.5 Connector for use with Conduit Connection Codes 2 & 4	-A2
M20 Connector for use with Conduit Connection Codes 1 & 3	-A3
Trumpet shaped PG 13.5 Cable Gland (Nickel Plated Brass) for use with Conduit Connection Codes 2 & 4	-A4

Electronic Housing Features—Specify Only One

External Zero Adjustment	-Z1
Custody Transfer Lock & Seal	-Z2
External Zero Adjustment and Custody Transfer Lock & Seal	-Z3

Ermeto Connectors—Specify Only One

Steel, Connecting 6 mm Tubing to ¼ NPT Process Connector	-E1
Steel, Connecting 12 mm Tubing to ½ NPT Process Connector	-E2
316 ss, Connecting 6 mm Tubing to ¼ NPT Process Connector	-E3
316 ss, Connecting 12 mm Tubing to ½ NPT Process Connector	-E4

Factory Configuration—Specify Only One

Digital Output (FoxCom only) . . . . . -C1
Full Factory Configuration (Requires Configuration Form) . . . . . -C2

Instruction Book Options

Without Instruction Book & CD . . . . . -K1

Vent Screw in Process Cover

Supply Vent Screw in Side of Each Process Cover
(Available only on Traditional Process Cover Structure Codes 22 to 47) . . . . . -V
Omit Vent Screw in Side of Each Process Cover
(Available only on Type LP1 Low Profile Process Cover Structures Codes LL, LM, LC, and LD) . . . . . -V1

Adapters for Direct Mount to Competitive Manifolds (See Product Specification Sheet for manifold compatibility)

Adapter plate, Bolts, and Gaskets for Coplanar Manifolds . . . . . -P1
Not available with:
Bolting Options -B1, -B2, and -B3;
DIN 19213 Construction Options -D1, -D2, -D4, -D5, -D6, -D7, and -D8

Miscellaneous Optional Selections

Five-Year Warranty . . . . . -W
Supplemental Customer Tag . . . . . -T
High Static Pressure Rating (40 MPa, 5800 psi, 400 bar or kg/cm^2) . . . . . -Y
Low Temperature Operative Limit of -50C (-58F) for Entire Transmitter . . . . . -J
Gasket for Vacuum Service with Pressure Seals[8] . . . . . -G1

Specify calibrated differential pressure range

Specify information for instrument tag

Notes

1 Upper Range Limit is the lower of the values in this table and in the Maximum static and Overrange Table, which lists the derated pressures associated with various options.
2 Refer to Section "Pressure Seals and Industry-Specific Sonnection" for additional information
3 Direct Mount seals that may be specified are models PSFLT, PSSCT, and PSSST.
4 Remote Mount seals that may be specified are models PSFPS, PSFES, PSFAR, PSTAR, PSISR, PSSCR, and PSSSR.
5 Standard equipment on IGP20-A, and –V.
6 Available only with Structure Codes having Silicone Fill Fluid.
7 Available only with Structure Codes having Fluorinert Fill Fluid and not available with carbon steel Process Cover.
8 Option -G1 is required when pressure seal (Structure Codes F1-F4, S1-S6, or SA-SF) will be used on vacuum applications. This option substitutes vacuum service metal gaskets for the standard ptfe Process Cover Gasket.

IDP15 - I/A Series System Premium Performance Differential Pressure Transmitter

The Foxboro IDP15D Differential Pressure Transmitter is a microprocessor-based smart transmitter that provides precise, reliable, measurement of differential pressure, and features high performance and excellent stability. Capable of measuring gas, liquid, vapor, and liquid levels, it transmits 4 to 20mA dc analog and digital signals according to the measured differential pressure. It can also execute two-way communications using HART protocol, thus facilitating self-diagnosis, range resetting, and automatic zero adjustment. For complete specifications, refer to Product Specification Sheet PSS 2A-1C17 A

- Unique characterization and composite semiconductor sensors realize high accuracy up to 0.04% F.S.
- Proven Sensor technology enables Long-term stability up to 0.1% of URL per 10-year period.
- A wide measuring range is available from a single model. This feature is highly effective in taking measurement over a wide range and reducing the need for inventory.
- Draft Range (-4" H20 to +4" H20)
- 0.5 to 100kPa (rangeability: 200 to 1).
- Two-way communication using HART protocol facilitates self-diagnosis, range resetting, automatic zero adjustment, and other operations.
- HART communication protocol.

Functional Specifications

Measuring Span Limits

kPa	Psi	bar	mmHg	mmH20	InH20
0.1 and 2	0.015 and 0.29	0.001 and 0.2	0.75 and 15	10.20 and 203.94	0.4 and 8

Setting Range Limits

kPa	Psi	bar	mmHg	mmH20	InH20
-1 and +1	0.145 and +0.145	-0.01 and +0.01	-7.5 and +7.5	-102 and +102	-4 and +4

Working Pressure Limits

kPa	Psi	bar	mmHg	mmH20	InH20
-70 and +210	-10 and +30	0.7 and +2.1	-525 and +1575	-7130 and +21,400	-280 and +840

How to Order—Specify model number IDP15 followed by order code for each selection configuration

Communications
4 to 20 mA with HART Communications . . . . . B

Fill Fluid
Silicone . . . . . A
Fluorine (for Oxygen Service) . . . . . H

Material Covers
Meterbody Covers: SCS14A, Vent/Drain Plugs 316SST . . . . . A

Material Body
Meterbody: 316SST, Process Diaphragms: 316LSST. . . . . A

Process Connections

1/4 in NPT Internal Thread w/ Adapter Flange	E
1/4 in NPT Internal Thread No Adapter Flange and w/o Adapter Flange	F
1/4 in NPT Internal Thread with 1/2 NPT Adapter Flange	D

Mounting (Process Installation)

Horizontal Piping, Front Connection	C

Bolting

304SST	B

Electrical Connection

1/2 in NPT, Watertight	A
M20, Watertight	B

Electrical Safety

None	XX
FM Explosionproof	F1
FM Intrinsically Safe	F2
FM Nonincendive	F5
FM EX, IS, and NI	F6
ATEX Flameproof	A1
ATEX Intrinsically Safe	A2
ATEX Energy Limited	A5
In Metro Flameproof	B1
In Metro Intrinsically Safe	B2
In Metro Type N	B3
CSA Explosionproof	C1
CSA Intrinsically Safe	C2

Indicator

None	X
With Indicator	A

Paint

Corrosion Proof	B

Failure Alarm Configuration

Upper Limit of Output at Abnormal Condition	A
Lower Limit of Output at Abnormal Condition	B

Mounting Bracket

None	X
304 SST (Universal)	1

Optional Selections

No Options	XX
With External Zero Adjustment	A2
Long Vent / Drain Plug	G4
Side Vent / Drain Plug (Top)	G6
Side Vent / Drain Plug (Bottom)	G7
Oil/ Water Free Finish	K1
Oil Free Finish	K3
Safety Transmitter	Q1
NAMUR NE43 Compliant	Q2
Alarm Output (Contact utput)	Q7
Custom Calibration	R1
Test Report	T1
Mill Certificate	T2
Traceability Certificate	T4
Non SI Unit	W1

IDP25 I/A Series® Multirange Pressure Transmitters for Differential Pressure Measurement

This intelligent, multirange, two-wire d/p Cell transmitter provides precise, reliable, measurement of differential pressure providing the adjustment range of "two transmitters in one."

For complete specifications refer to product specification sheet PSS 2A-1C14 K.

- Features:
  - *400:1 turndown span adjustment available with 4-20 mA output, HART, or Foundation Fieldbus digital communications*
  - *Wide measurement ranges from 0-0.12 to 0-250 kPa (0-0.5 to 0-1000 inH_2O) with just two sensor selections*
  - *Process wetted parts all 316 ss and 316L ss with ptfe gaskets; Hastelloy C optional*
- Benefits:
  - *Multirange transmitter simplifies planning, ordering and spares procurement and stocking.*
  - *High reliability.*
- Performance Specifications
  - *Accuracy ±0.075% of span for 120:1 turndown*
  - *Small span accuracy ±(0.000625)(URL/Span)% span for turndowns >120:1*
  - *Long term drift: < ±0.02% of URL per year over 5 year period*
  - *Temperature effect ±(0.03% URL + 0.06% span)/28°C (50°F)*
- Electrical Clasification:
  - *Various agency certifications for Zone and Division hazardous locations. Refer to Product Specification sheets for complete specifications.*
- Standard Warranty 5 Years

Functional Specifications

Span Limits for IDP25 Multirange Differential Pressure Transmitters

Span Limit Code	kPa	psi	mbar	mmHg	inH_2O
B	0.12 and 50	0.017 and 7.2	1.2 and 500	0.93 and 375	0.5 and 200
C	0.625 and 250	0.09 and 36	6.25 and 2500	4.68 and 1870	2.5 and 1000

Range Limits for IDP25 Multirange Differential Pressure Transmitters(1)

Span Limit Code	kPa	psi	mbar	mmHg	inH_2O
B	-50 and +50	-7.2 and +7.2	-500 and +500	-375 and +375	-200 and +200
C	-250 and +250	-36 and +36	-2500 and +2500	-1870 and +1870	-1000 and +1000

Maximum Static and Overrange Pressures			
	Overrange Pressure Rating		
Transmitter Configuration (See Model Code for Description of Options)	MPa	psi	bar or kg/cm2
Standard or with Option -B2, -D3, or -D7	25	3625	250
With Option -B3	20	2900	200
With Option -D1	16	2320	160
With Option -B1 or -D5	15	2175	150
With Option -D2, -D4, -D6, or -D8	10	1500	100
With Structure Codes 78 and 79	2.1	300	21
With Option -D9 or -Y	40	5800	400

How to Order – Specify Model Number IDP25

Electronics Versions and Output Signal

4 to 20 mA/HART	-T
Foundation Fieldbus	-F

Structure Code – Select from one of the following three groups:

1. Transmitter With Traditional Structure

Process Covers	Sensor	Fill Fluid	
316 ss	316L ss	Silicone	22
316 ss	316L ss	Fluorinert	23
316 ss	Hastelloy C	Silicone	26
316 ss	Hastelloy C	Fluorinert	27
Hastelloy C	Hastelloy C	Silicone	46
Hastelloy C	Hastelloy C	Fluorinert	47

2. Transmitter Prepared for Foxboro Model Coded Seals(2)

Direct Connect Seal on HI Side; ½ NPT Process Connector LO Side; Silicone Fill in Sensor(3)	F1
Direct Connect Seal on HI Side; ½ NPT Process Connector LO Side; Fluorinert Fill in Sensor(3)	F2
Direct Connect Seal on HI Side; Remote Seal with Capilary LO Side; Silicone Fill in Sensor(3)	F3
Direct Connect Seal on HI Side; Remote Seal with Capilary LO Side; Fluorinert Fill in Sensor(3)	F4
Remote Seals on Both HI and LO Sides, Silicone Fill in Sensor(4)	S1
Remote Seals on Both HI and LO Sides, Fluorinert Fill in Sensor(4)	S2
Remote Seal HI Side, ½ NPT Connector LO Side, Silicone Fill in Sensor(4)	S3
Remote Seal HI Side, ½ NPT Connector LO Side, Fluorinert Fill in Sensor(4)	S4
Remote Seal LO Side, ½ NPT Connector HI Side, Silicone Fill in Sensor(4)	S5
Remote Seal LO Side, ½ NPT Connector HI Side, Fluorinert Fill in Sensor(4)	S6

3. Transmitter Prepared for non-Foxboro Seals

Remote Seal on High and Low Sides; Silicone Fill in Sensor	SA
Remote Seal on High and Low Sides; Inert Fill in Sensor	SB
Remote Seal on High Side and ½ NPT Connector on Low Side, Silicone Fill in Sensor	SC
Remote Seal on High Side and ½ NPT Connector on Low Side, Inert Fill in Sensor	SD
Remote Seal on Low Side and ½ NPT Connector on High Side, Silicone Fill in Sensor	SE
Remote Seal on Low Side and ½ NPT Connector on High Side, Inert Fill in Sensor	SF

Span Limits (Differential Pressure Units)

kPa	psi	mbar	mmHg	inH_2O	
0.12 and 50	0.017 and 7.2	1.2 and 500	0.93 and 375	0.5 and 200	B
0.625 and 250	0.09 and 36	6.25 and 2500	4.68 and 1870	2.5 and 1000	C

Process Connector (Removable) – Supplied in same material as process cover

None; Process Covers have ¼ NPT Internal Thread	0
¼ NPT (Not Available in Hastelloy C Material)	1
½ NPT	2
Rc ¼ (Not Available in Hastelloy C Material)	3
Rc ½	4
½ Schedule 80 Welding Neck (Not Available in Hastelloy C Material)	6

Conduit Connection and Housing Material

½ NPT Conduit Connections, Aluminum Housing	1
PG 13.5 Conduit Connections, Aluminum Housing	2
½ NPT Conduit Connections, 316 ss Housing	3
PG 13.5 Conduit Connections, 316 ss Housing	4
M20 Conduit Connection, Both Sides, Aluminum Housing	5
M20 Conduit Connection, Both Sides, 316 ss Housing	6

Electrical Safety (See PSS for Description and Restrictions)

ATEX II GD, EEx ia IIC, or II ½ GD, EEx ib IIC	E
ATEX Flameproof; II 2 GD, EEx d IIC, Zone 1	D
ATEX II 3 GD, EEx nL IIC	N
ATEX Multiple Certifications (E, D, and N)	M
CSA Certified	C
CSA Certified (including Flameproof Zones)	B
FM approved	F
FM approved (including Flameproof Zones)	G
IECEx Intrinsically Safe, Ex ia IIC T4	T
IECEx Intrinsically Safe, Protection n; Ex nL IIC T4	U

Optional Selections

Refer to Optional Selection descriptions that follow.

Mounting Bracket Set – Specify Only One

Painted Steel Bracket with Plated Steel Bolts	-M1
Stainless Steel Bracket with Stainless Steel Bolts	-M2

Digital Indicator with Pushbuttons

Digital Indicator, Pushbuttons, and Window Cover	-L1

DIN 19213 Construction used with Process Connector Code "0" and 316 ss process Covers Only (b)

Single Ended Process Cover with M10 Bolting	-D1
Double Ended Process Cover with M10 Bolting (Blind Kidney Range on Back)	-D2
Single Ended Process Cover with 7/16 inch Bolting	-D3
Double Ended Process Cover with 7/16 inch Bolting (Blind Kidney Flange on Back)	-D4
Single Ended Process Covers with 316 ss 7/16 inch Bolting	-D5
Double Ended Process Covers with 316 ss 7/16 inch Bolting (Blind Kidney Flange on Back)	-D6
Single Ended Process Covers with 17-4 ss 7/16 inch Bolting	-D7
Double Ended Process Covers with 17-4 ss 7/16 inch Bolting (Blind Kidney Flange on Back)	-D8
Single Ended Process Covers with 17-4 ss 7/16 inch Bolting and 40 MPa (400 bar or kg/cm^2, 5800 psi) static pressure rating	-D9

Cleaning and Preparation – Specify Only One

Unit Degreased – for Silicone Filled Sensors Only (Not for Oxygen/Chlorine/Other Fluids that may react with Silicone)	-X1
Cleaned and Prepared for Oxygen Service – for Fluorinert Filled Sensors Only (Not Available with Silicone Filled Sensors)	-X2
Cleaned and Prepared for Chlorine Service – for Fluorinert Filled Sensors Only (Not Available with Silicone Filled Sensors)	-X3

Bolting for Process Covers/Connectors – Specify Only One

316 ss Bolts and Nuts (Pressure Derated, to 15 MPa (2175 psi)	-B1
17-4 ss Bolts and Nuts	-B2
B7M Bolts and Nuts (NACE) (Pressure de-rated, refer to table)	-B3

Conduit Thread Adapters – Specify Only One

Hawk-Type ½ NPT Cable Gland for use with Conduit Connection Codes 1 & 3	-A1
Plastic PG 13.5 Connector for use with Conduit Connection Codes 2 & 4	-A2
M20 Connector for use with Conduit Connection Codes 1 & 3	-A3
Trumpet shaped PG 13.5 Cable Gland (Nickel Plated Brass) for use with Conduit Connection Codes 2 & 4	-A4

Electronics Housing Features – Specify Only One

External Zero Adjustment	-Z1
Custody Transfer Lock and Seal	-Z2
External Zero Adjustment and Custody Transfer Lock/Seal	-Z3

Custom Factory Configuration – Specify Only One

Digital Output (FoxCom Only)	-C1
Full Factory Configuration (Requires Configuration Form to be Filled Out)	-C2

Ermeto Connectors – Specify Only One

Steel, Connecting 6 mm Tubing to ¼ NPT Process Connector . . . . . -E1
Steel, Connecting 12 mm Tubing to ½ NPT Process Connector. . . . . -E2
316 ss, Connecting 6 mm Tubing to ¼ NPT Process Connector . . . . . -E3
316 ss, Connecting 12 mm Tubing to ½ NPT Process Connector . . . . . -E4

Instruction Books (Paper instruction book and Brochure plus Full Documentation Set on CD-ROM is Standard)

Without Instruction Book and CD . . . . . -K1

Miscellaneous Optional Selections

Supplemental Customer Tag (Stainless Steel Tag wired onto Transmitter) . . . . . -T
Vent Screw in Side of Each Process Cover (Vent screws in cover ends are standard) . . . . . -V
Five-Year Warranty. . . . . -W
High Static Pressure Rating (40 MPa, 5800 psi, 400 bar or kg/cm^2) . . . . . -Y
Low Temperature Operative Limit of -50C (-58F) for Entire Transmitter . . . . . -J
Gasket for Vacuum Service with Pressure Seals . . . . . -G1

Notes:

1 Upper Range Limit is the lower of the values in this table and in the Maximum static and Overrange Table, which lists the derated pressures associated with various options.
2 Refer to Section "Pressure Seals and Industry-Specific Sonnection" for additional information.
3 Direct Mount seals that may be specified are models PSFLT, PSSCT, and PSSST.
4 Remote Mount seals that may be specified are models PSFPS, PSFES, PSFAR, PSTAR, PSISR, PSSCR, and PSSSR.
5 Option -G1 is required when pressure seal (Structure Codes F1-F4, S1-S6, or SA-SF) will be used on vacuum applications. This option substitutes vacuum service metal gaskets for the standard ptfe Process Cover Gasket.

IDP31 - I/A Series System Premium Performance Differential Pressure Transmitter

The Foxboro IDP31D Differential Pressure Transmitter is a microprocessor-based smart transmitter that provides precise, reliable, measurement of differential pressure, and features high performance and excellent stability. Capable of measuring gas, liquid, vapor, and liquid levels, it transmits 4 to 20mA dc analog and digital signals according to the measured differential pressure. It can also execute two-way communications using HART protocol, thus facilitating self-diagnosis, range resetting, and automatic zero adjustment. For complete specifications, refer to Product Specification Sheet PSS 2A-1C17 A

- Unique characterization and composite semiconductor sensors realize high accuracy up to 0.04% F.S.
- Proven Sensor technology enables Long-term stability up to 0.1% of URL per 10-year period.
- A wide measuring range is available from a single model. This feature is highly effective in taking measurement over a wide range and reducing the need for inventory.
- 100 msec response time
- 0.5 to 100kPa (rangeability: 200 to 1).
- Two-way communication using HART protocol facilitates self-diagnosis, range resetting, automatic zero adjustment, and other operations.
- HART communication protocol.

Functional Specifications

Measuring Span Limits

kPa	Psi	bar	mmHg	mmH20	InH20
0.5 and 100	0.007 and 14.5	0.005 and 1	3.75 and 750	50 and 10,160	2 and 400

Setting Range Limits

kPa	Psi	bar	mmHg	mmH20	InH20
-100 and +100	-14.5 and +14.5	-1 and +1	-750 and +750	-10,160 and +10,160	-400 and +400

Working Pressure Limits

kPa	Psi	bar	mmHg	mmH20	InH20
2(abs) and 21,000	0.29(abs) and 3045	0.02(abs) and 210	15(abs) and 157,500	204(abs) and 2MM	8(abs) and 84,300

How to Order–Specify model number IDP31 followed by order code for each selection configuration

Communications
4 to 20 mA with HART Communications . . . . . B

Fill Fluid
Silicone . . . . . A
Fluorine (for Oxygen Service) . . . . . H

Material Covers
Meterbody Covers: SCS14A, Vent/Drain Plugs 316SST . . . . . A

Material Body
Meterbody: 316SST, Process Diaphragms: 316LSST. . . . . A
Meterbody, Diaphragms: ASTM B575 (Equiv. to Hastelloy C) . . . . . B

Process Connections

1/4 in NPT Internal Thread w/ Adapter Flange	E
1/4 in NPT Internal Thread No Adapter Flange and w/o Adapter Flange	F
1/4 in NPT Internal Thread with 1/2 NPT Adapter Flange	D

Mounting (Process Installation)

Horizontal Piping, Front Connection	C

Bolting

Carbon Steel	A
304SST	B
630SST	C

Electrical Connection

1/2 in NPT, Watertight	A
M20, Watertight	B

Electrical Safety

None	XX
FM Explosionproof (a)	F1
FM Intrinsically Safe (a)	F2
FM Nonincendive (a)	F5
FM EX, IS, and NI (a)	F6
ATEX Flameproof	A1
ATEX Intrinsically Safe	A2
ATEX Energy Limited	A5
In Metro Flameproof	B1
In Metro Intrinsically Safe	B2
In Metro Type N	B3
CSA Explosionproof (a)	C1
CSA Intrinsically Safe (a)	C2

Indicator

None	X
With Indicator	A

Paint

Corrosion Proof	B

Failure Alarm Configuration

Upper Limit of Output at Abnormal Condition	A
Lower Limit of Output at Abnormal Condition	B

Mounting Bracket

None	X
304 SST (Universal)	1

Optional Selections

No Options	XX
Pitch Adjusting Adapter	A1
With External Zero Adjustment	A2
Long Vent / Drain Plug	G4
Side Vent / Drain Plug (Top)	G6
Side Vent / Drain Plug (Bottom)	G7
Oil/ Water Free Finish	K1
Oil Free Finish	K3
Safety Transmitter	Q1
NAMUR NE43 Compliant	Q2
Alarm Output (Contact utput)	Q7
Custom Calibration	R1
Test Report	T1
Mill Certificate	T2
Traceability Certificate	T4
Non SI Unit	W1

Notes

(a) Max working pressure is restricted to 10MPa when 304SST bolt/nut is selected.`

IDP32 - I/A Series System Premium Performance Differential Pressure Transmitter

The Foxboro IDP32D Differential Pressure Transmitters is a microprocessor-based smart transmitter that provides precise, reliable, measurement of differential pressure, and features high performance and excellent stability. Capable of measuring gas, liquid, vapor, and liquid levels, it transmits 4 to 20mA dc analog and digital signals according to the measured differential pressure. It can also execute two-way communications using HART protocol, thus facilitating self-diagnosis, range resetting, and automatic zero adjustment. For complete specifications, refer to Product Specification Sheet PSS 2A-1C17 A

- Unique characterization and composite semiconductor sensors realize high accuracy up to 0.04% F.S.
- Proven Sensor technology enables Long-term stability up to 0.1% of URL per 10-year period.
- A wide measuring range is available from a single model. This feature is highly effective in taking measurement over a wide range and reducing the need for inventory.
- High static pressure
- 100 msec response time
- 0.5 to 100kPa (rangeability: 200 to 1).
- Two-way communication using HART protocol facilitates self-diagnosis, range resetting, automatic zero adjustment, and other operations.
- HART communication protocol.

Functional Specifications

Measuring Span Limits

kPa	Psi	bar	mmHg	mmH20	InH20
0.5 and 100	0.007 and 14.5	0.005 and 1	3.75 and 750	50 and 10,160	2 and 400

Setting Range Limits

kPa	Psi	bar	mmHg	mmH20	InH20
-100 and +100	-14.5 and +14.5	-1 and +1	-750 and +750	-10,160 and +10,160	-400 and +400

Working Pressure Limits

kPa	Psi	bar	mmHg	mmH20	InH20
2(abs) and 42,000	0.29(abs) and 6090	0.02(abs) and 420	15(abs) and 315,000	204(abs) and 4MM	8(abs) and 168,600

How to Order—Specify model number IDP32 followed by order code for each selection configuration

Communications
4 to 20 mA with HART Communications . . . . . B

Fill Fluid
Silicone . . . . . A
Fluorine (for Oxygen Service) . . . . . H

Material Covers
Meterbody Covers: SCS14A, Vent/Drain Plugs 316SST . . . . . A

Material Body
Meterbody: 316SST, Process Diaphragms: 316LSST. . . . . A

Process Connections
1/4 in NPT Internal Thread w/o Adapter Flange . . . . . F

Mounting (Process Installation)
Vertical Piping, Top Connection . . . . . A

Bolting
Carbon Steel . . . . . A
304SST(a). . . . . B
630SST C

Electrical Connection
1/2 in NPT, Watertight. . . . . A
M20, Watertight . . . . . B

Electrical Safety
None XX
FM Explosionproof F1
FM Intrinsically Safe F2
FM Nonincendive. F5
FM EX, IS, and NI F6
ATEX Flameproof A1
ATEX Intrinsically Safe A2
ATEX Energy Limited. A5
In Metro Flameproof B1
In Metro Intrinsically Safe B2
In Metro Type N B3
CSA Explosionproof C1
CSA Intrinsically Safe C2

Indicator
None. X
With Indicator . . . . . A

Paint
Corrosion Proof . . . . . B

Failure Alarm Configuration
Upper Limit of Output at Abnormal Condition . . . . . A
Lower Limit of Output at Abnormal Condition . . . . . B

Mounting Bracket
None. X
Carbon Steel (Flat shape) 5
304 SST (Universal) 6

Optional Selections
No Options XX
With External Zero Adjustment A2
Long Vent / Drain Plug G4
Oil/ Water Free Finish K1
Oil Free Finish. K3
Safety Transmitter. Q1
NAMUR NE43 Compliant Q2
Alarm Output (Contact utput) Q7
Custom Calibration R1
Test Report. T1
Mill Certificate T2
Traceability Certificate T4
Non SI Unit W1

Notes
(a) Max working pressure is restricted to 10MPa when 304SST bolt/nut is selected.

IDP50 I/A Series® Premium Performance Transmitters for Differential Pressure Measurement

This intelligent, premium performance two-wire d/p Cell transmitter provides precise, reliable measurement of differential pressure with extremely low total probable error (TPE).

For complete specifications refer to product specifications sheet PSS 2A-1C14 L

- Features:
  - *Wide measurement range from 0-0.63 to 0-250 kPa (0-2.5 to 0-1000 inH$_2$O) with just two sensor selections*
  - *High accuracy and low total probable error*
  - *Process wetted parts all 316 ss and 316L ss with ptfe gaskets*
  - *Available with 4-20 mA output and HART, or Foundation Fieldbus digital communications*
- Benefits:
  - *High reliability*
  - *Improved process control; ideal for wide rangeability flow applications*
  - *Meets most high performance application requirements to 25 MPa (3625 psi)*
- Standard Warranty 5 Years
- Performance Specifications
  - *Accuracy ±0.05% of span over full 80:1 turndown*
  - *Long term drift is <±0.02% of URL per year over 5 year period*
  - *Temperature effect ±(0.015% URL + 0.03% span)/28°C (50°F)*
- Electrical Clasification:
  - *Various agency certifications for Zone and Division hazardous locations. Refer to Product Specification sheets for complete specifications.*

Functional Specifications

Span Limits

Span Limit Code	kPa	MPa	psi	mbar	bar of kg/cm^2	mmHg	inH^{2}O
B	0.63 and 50	--	0.091 and 7.2	6.3 and 500	--	4.7 and 375	2.5 and 200
C	3.1 and 250	--	0.45 and 36	31.3 and 2500	--	23.4 and 1870	12.5 and 1000
M (b)	--	0.017 and 1.4	2.5 and 200	--	01.7 and 14	--	--
D (b)	--	0.17 and 14	25 and 2000	--	1.7 and 140	--	--

(b) Span Limit Codes M and D are only available in a gauge pressure configuration (only available with Option Code -G2).

Range Limits(1)

Span Limit Code	kPa	MPa	psi	mbar	bar of kg/cm2	mmHg	inH^{2}O
B	-50 and +50	--	-7.2 and +7.2	-500 and +500	--	-375 and +375	-200 and +200
C	-250 and +250	--	-36 and +36	-2500 and +2500	--	-1870 and +1870	-1000 and +1000
M (b)	--	-0.1 and 1.4	-14.7 and +200	--	-1 and +14	--	--
D (b)	--	-0.21 and +14	-30 and +2000	--	-2.1 and +140	--	--

(b) Span Limit Codes M and D are only available in a gauge pressure configuration (only available with Option Code -G2).

Maximum Static and Overrange Pressures

Transmitter Configuration (See Model Code for Description of Options)	Over **Overrange Pressure Rating**		
	MPa	**psi**	**bar or kg/cm^2**
Standard or with Option -B2, -D3, or -D7	25	3625	250
With Option -B3	20	2900	200
With Option -D1	16	2320	160
With Option -B1 or -D5	15	2175	150
With Option -D2, -D4, -D6, or -D8	10	1500	100
With Structure Codes 78 and 79	2.1	300	21
With Option -D9 or -Y	40	5800	400

How to Order – Specify Model Number IDP50

Electronics Versions and Output Signal

4 to 20 mA/HART	-T
Foundation Fieldbus	-F

Structure Code - Select from one of the following groups:

Transmitter with Traditional Structure

Process Cover	Sensor Material	Fill Fluid	
316 ss	316L ss	Silicone	22
316 ss	Hastelloy C	Silicone	26
Hastelloy C	Hastelloy C	Silicone	46

Transmitter with Low Profile Structure LP1 (Not available with Pressure Seals)

Process Cover	Sensor Material	Fill Fluid	
316 ss	316L ss	Silicone	LL
316 ss	Hastelloy C	Silicone	LC

Transmitter with Low Profile Structure LP2 (Not available with Pressure Seals)

Process Cover	Sensor Material	Fill Fluid	
316 ss	316L ss	Silicone	52
316 ss	Hastelloy C	Silicone	56

Structure code prepared for Foxboro Model Coded Seals – requires specification of linked seal model codes (ref. PS2A-1Z11)

Direct Connect Seal on High Side (Flanged PSFLT or Sanitary PSSCT or PSSST) and 1/2 NPT Connecter on Low Side; Silicone Fill in Sensor	F1
Direct Connect Seal on High Side (Flanged PSFLT or Sanitary PSSCT or PSSST) and Remote Seal on Low Side; Silicone Fill in Sensor	F3
Remote Seals on High & Low Sides; Silicone Fill in Sensor	S1
Remote Seal on High Side & 1/2 NPT Connector on Low Side; Silicone Fill in Sensor	S3
Remote Seal on Low Side & 1/2 NPT Connector on High Side; Silicone Fill in Sensor	S5

Structure code prepared for Other Seals – Do not specify Foxboro Model Coded Seals

Remote Seals on High & Low Sides; Silicone Fill in Sensor	SA
Remote Seal on High Side & 1/2 NPT Connector on Low Side; Silicone Fill in Sensor	SC
Remote Seal on Low Side & 1/2 NPT Connector on High Side; Silicone Fill in Sensor	SE

Span Limits – Differential Pressure Units:

kPa	inH^2O	mbar	
0.63 and 50	2.5 and 200	6.3 and 500	B
3.1 and 250	12.5 and 1000	31.3 and 2500	C
MPa	**psi**	**bar or kg/cm²**	
0.017 and 1.4	2.5 and 200	0.17 and 14	M
0.17 and 14	25 and 2000	1.7 and 140	D

Electrical Safety (See PSS for Description and Restrictions)

ATEX II 1 GD, EEx ia IIC	E
ATEX II 2 GD, EEx d IIC	D
ATEX II 3 GD, EEx nL IIC	N
Multiple ATEX Certifications (Customer Marks Plate Data)	M
CSA Certified	C
CSA Certified (Including Flameproof Zone)	B
FM Approved	F
FM Approved (Including Flameproof Zone)	G
IECEx Ex d IIC T6	V

Optional Selections

Mounting Bracket Set – Specify Only One

Mounting Bracket Set, Painted Steel Bracket with Plated Steel Bolts	-M1
Mounting Bracket Set, 304 ss Bracket with 316 ss Bolts	-M2
Mounting Bracket Set, Universal, ss Bracket with ss Bolts	-M3

Indicator Pushbuttons

Digital Indicator, Internal Pushbuttons and Window Cover	-L1

With Aluminum Housing – Conduit & Housing Material Codes 1, 2 & 5

With 316 ss Housing – Conduit & Housing Material Codes 3, 4 & 6

DIN 19213 Construction – Specify Only One and Specify Process Connector Code 0

Single Ended Process Cover with M10 Bolting	-D1
Double Ended Process Cover with M10 Bolting (Blind Kidney Range on Back)	-D2
Single Ended Process Cover with 7/16 inch Bolting	-D3
Double Ended Process Cover with 7/16 inch Bolting (Blind Kidney Flange on Back)	-D4
Single Ended Process Covers with 316 ss 7/16 inch Bolting	-D5
Double Ended Process Covers with 316 ss 7/16 inch Bolting (Blind Kidney Flange on Back)	-D6
Single Ended Process Covers with 17-4 ss 7/16-inch Bolting	-D7
Double Ended Process Covers with 17-4 ss 7/16-inch Bolting (Blind Kidney Flange on Back)	-D8
Single Ended Process Covers with 17-4 ss 7/16-inch Bolting an 40 mPa (400 bar or kg/cm^2, 5800 psi) static pressure rating	-D9

Cleaning and Preparation

Unit Degreased – (Silicone Filled Sensors – Not for Oxygen, Chlorine, or Other Fluids that may react with Silicone)	-X1

Bolting for Process Covers/Connectors – Specify Only One

316 ss Bolts and Nuts (Pressure Derated, to 15 MPa (2175 psi)	-B1
17-4 ss Bolts and Nuts	-B2
B7M Bolts and Nuts (NACE) (Pressure de-rated, refer to table)	-B3

Conduit Thread Adapters – Specify Only One

Hawk-Type ½ NPT Cable Gland for use with Conduit Connection Codes 1 & 3	-A1
Plastic PG 13.5 Connector for use with Conduit Connection Codes 2 & 4	-A2
M20 Connector for use with Conduit Connection Codes 1 & 3	-A3
Trumpet shaped PG 13.5 Cable Gland (Nickel Plated Brass) for use with Conduit Connection Codes 2 & 4	-A4

Electronics Housing Features – Specify Only One

External Zero Adjustment	-Z1
Custody Transfer Lock and Seal	-Z2
External Zero Adjustment and Custody Transfer Lock/Seal	-Z3

Custom Factory Configuration – Specify Only One

Digital Output (FoxCom Only)	-C1
Full Factory Configuration (Requires Configuration Form to be Filled Out)	-C2

Ermeto Connectors – Specify Only One

Steel, Connecting 6 mm Tubing to ¼ NPT Process Connector	-E1
Steel, Connecting 12 mm Tubing to ½ NPT Process Connector	-E2
316 ss, Connecting 6 mm Tubing to ¼ NPT Process Connector	-E3
316 ss, Connecting 12 mm Tubing to ½ NPT Process Connector	-E4

Instruction Books (Paper Instruction Book, Brochure plus Full Documentation Set on CD-ROM is Standard)

Without Instruction Book and CD	-K1

Miscellaneous Optional Selections

Supplemental Customer Tag (Stainless Steel Tag wired onto Transmitter)	-T
Vent Screw in Side of Each Process Cover (Vent screws in cover ends are standard)	-V
Five-Year Warranty	-W
High Static Pressure Rating (40 MPa, 5800 psi, 400 bar or kg/cm^2)	-Y
Low Temperature Operative Limit of -50°C (-58°F) for Entire Transmitter	-J

Note:

1 Upper Range Limit is the lower of the values in this table and in the Maximum static and Overrange Table, which lists the derated pressures associated with various options.

IMV25 I/A Series® Multivariable Transmitter for Pressure, Differential Pressure and Temperature

PRESSURE • DIFFERENTIAL PRESSURE • PROCESS TEMPERATURE
SENSOR TEMPERATURE • ELECTRONICS TEMPERATURE

This intelligent two-wire multivariable transmitter provides precise and reliable measurement of pressure, differential pressure, sensor and electronics temperatures, and process temperature (from an external RTD).

For complete specifications refer to product specification sheet PSS 2A-1C15 B and D.

- Features:
  - *One transmitter for several measurements and many applications*
  - *A selection of HART, Foundation Fieldbus, or Modbus digital communications*
  - *4-20 mA output assignable to any measurement (FoxCom and HART)*
  - *Up to four 4-20 mA output signals when used with HART Interface Module*
  - *May be configured with PCMV Configurator (FoxCom and HART) or PCMM Configurator (Modbus)*

Benefits:

- One transmitter replaces 3 separate transmitters
  - *Reduced purchase and installation costs*
  - *Fewer valves and process connections*
  - *Less wiring*
  - *Reduced chance of fugitive emissions*
- Performance Specs:
  - *Accuracy, Pressure and DP (10:1 turndown) ±0.05% span digital; ±0.075% span 4-20 mA*
  - *Accuracy, Process Temperature ±0.28°C (±0.50°F) within ± 140°C (250°F) of the normal operating point (excluding RTD uncertainty)*
  - *Stability: ±0.05% of URL per year over 5 year period*
- Standard Warranty 5 Years

Functional Specifications

Span and Range Limits for Differential Pressure Measurement

Span Code	Span Limits			Range Limits(1)		
	kPa	inH^2O	mbar	kPa	inH^2O	mbar
L	0.12 and 2.5	0.5 and 10	1.2 and 25	-2.5 and +2.5	-10 and +10	-25 and +25
A	0.75 and 7.5	3 and 30	7.5 and 75	-7.5 and +7.5	-30 and +30	-75 and +75
B	0.5 and 50	2 and 200	5 and 500	-50 and +50	-200 and +200	-500 and +500
G	0.5 and 100	2 and 400	5 and 1000	-100 and +100	-400 and +400	-1000 and +1000
C	2.5 and 210	10 and 840	25 and 2100	-210 and +210	-840 and +840	-2100 and +2100

1 Positive values indicate HI side of sensor at the high pressure, and negative values indicate LO side of sensor at the high pressure.

Span and Range Limits for Absolute Pressure Measurement

Span Code	Span Limits			Range Limits		
	MPa	psi	bar or kg/cm^2	MPaa	psia	bar or kg/cm^2 absolute
D	0.02 and 2.1	3 and 300	0.21 and 21	0 and 2.1	0 and 300	0 and 21
G	0.07 and 3.4	10 and 500	0.7 and 34	0 and 3.4	0 and 500	0 and 34
E	0.21 and 10	30 and 1500	2.1 and 100	0 and 10	0 and 1500	0 and 100

- Application Versatility:
  - *Choice of Traditional or Low Profile Process Cover/Sensor Structures*
- Installation Versatility:
  - *Traditional "right angle" structure with process connections in horizontal plane*
  - *Low Profile "in line" structures with process connections in vertical plane*
- Two Low Profile Structures
  - *LP1 Structure — economical, small, light weight for direct manifold mounting in vertical or horizontal positions*
  - *LP2 Structure — designed for bracket or manifold mounting in vertical positions*

- Electrical Classification:
  - *Electrical Classification:Various Agency certification for Zone and Division hazardous Locations. Refer to Product Specification Sheets for complete specifications.*

Available Combinations of DP and AP Span Codes, and their Upper Range Limits (URLs), and Maximum Static and Maximum Working Pressure (MWPs), and Maximum Overrange Pressure

Span Code DP & AP	Sensor URL (DP and AP)				Maximum Static and Maximum Working Pressure		Maximum Overrange Pressure	
	DP	AP	DP	AP	MPaa	psia	MPaa	psia
LG	10 inH_2O	500 psia	2.5 kPa	3.4 MPaa	3.4	500	5	750
AG	30 inH_2O	500 psia	7.5 kPa	3.4 MPaa	3.4	500	5	750
BD	200 inH_2O	300 psia	50 kPa	2.1 MPaa	2.1	300	3.1	450
BE	200 inH_2O	1500 psia	50 kPa	10 MPaa	10	1500	15	2250
GG(2)	400 inH_2O	500 psia	100 kPa	3.4 MPaa	3.4	500	5.2	750
GE(2)	400 inH_2O	1500 psia	100 kPa	10 MPaa	10	1500	15	2250
CD	840 inH_2O	300 psia	210 kPa	2.1 MPaa	2.1	300	3.1	450
CE	840 inH_2O	1500 psia	210 kPa	10 Mpaa	10	1500	15	2250

2 Codes GG and GE only available with Modbus electronics.

How to Order – Specify Model Number IMV25

Electronics Versions and Output Signal

4 to 20 mA/HART . . . . . -T
FOUNDATION Fieldbus . . . . . -F
Modbus . . . . . -M

Structure Code – Select one from the following three groups:

1. With Traditional Structure

Covers	Sensor	Fill Fluid	
316 ss	316L ss	Silicone	22
316 ss	316L ss	Fluorinert	23
316 ss	Hastelloy C	Silicone	26
316 ss	Hastelloy C	Fluorinert	27
Hastelloy C	Hastelloy C	Silicone	46
Hastelloy C	Hastelloy C	Fluorinert	47

2. With Low Profile Structure LP1

Covers	Sensor	Fill Fluid	
316 ss	316L ss	Silicone	LL
316 ss	316L ss	Fluorinert	LM
316 ss	Hastelloy C	Silicone	LC
316 ss	Hastelloy C	Fluorinert	LD

3. With Low Profile Structure LP2

Covers	Sensor	Fill Fluid	
316 ss	316L ss	Silicone	52
316 ss	316L ss	Fluorinert	53
316 ss	Hastelloy C	Silicone	56
316 ss	Hastelloy C	Fluorinert	57

Span Limits – Differential Pressure (DP) Measurement

kPa	inH_2O	mbar	Available with:	
0.12 and 2.5	0.5 and 10	1.2 and 25	AP Span Limit Code G only	L
0.75 and 7.5	3 and 30	7.5 and 75	AP Span Limit Code G only	A
0.5 and 50	2 and 200	5 and 500	AP Span Limit Codes D and E only	B
0.5 and 100	2 and 400	5 and 1000	AP Span Limit Codes G and E only	G
2.5 and 210	10 and 840	25 and 2100	AP Span Limit Codes D and E only	C

Span Limits – Absolute Pressure (AP) Measurement (Absolute Measured;Gauge Calculated)

MPa	psi	bar or kg/cm	Available with:	
0.02 and 2.1	3 and 300	0.21 and 21	DP Span Limit Codes B and C only	D
0.07 and 3.4	10 and 500	0.7 and 34	DP Span Limit Codes L, A, and G only	G
0.21 and 10	30 and 1500	2.1 and 100	DP Span Limit Codes B, G, and C only	E

Other Measurements				
Temperature – Terminal Block supports Connection of External, 100 ohm Platinum RTD (DIN/IEC)	1			
Process Connector Type (Material Same as Process Cover Material)				
None, Covers tapped for ¼ NPT	0			
¼ NPT (Not Available with Hastelloy C Structure Codes 46 and 47)	1			
½ NPT	2			
R_C ¼ (Not Available with Hastelloy C Structure Codes 46 and 47	3			
R_C ½	4			
½ Schedule 80 Welding Neck (Not Available with Hastelloy C Structure Codes 46 and 47)	6			
Conduit Connection and Housing Material				
½ NPT, Aluminum Housing		1		
PG 13.5, Aluminum Housing		2		
½ NPT, 316 ss Housing		3		
PG 13.5, 316 ss Housing		4		
M20 Connection, Aluminum Housing		5		
M20 Connection, 316 ss Housing		6		
Electrical Safety (See PSS for Description and Restrictions)				
ATEX II GD, EEx ia IIC, or II ½ GD, EEx ib IIC			E	
ATEX Flameproof; II 2 GD, EEx d IIC, Zone 1			D	
ATEX II 3 GD, EEx nL IIC			N	
ATEX Multiple Certifications (E, D, and N)			M	
CSA Certified			C	
CSA Certified (including Flameproof Zones)			B	
FM approved			F	
FM approved (including Flameproof Zones)			G	
IECEx Flameproof, Ex d IIC T6			V	
Optional Selections				
Mounting Bracket Set				
Standard Style Painted Steel Bracket with Plated Steel Bolts				-M1
Standard Style Stainless Steel Bracket with Stainless Steel Bolts				-M2
Universal Style Stainless Steel Bracket with Stainless Steel Bolts				-M3
Digital Indicator with Pushbuttons				
Digital Indicator, Pushbuttons, and Window Cover				-L1
DIN 19213 Construction used with Process Connector Code "0" and 316 ss Covers Only[b]				
Single Ended Process Cover with M10, B7 Steel Bolting				-D1
Double Ended Process Cover with M10, B7 Steel Bolting (Blind Kidney Flange on Back)				-D2
Single Ended Process Cover with 7/16 in, B7 Steel Bolting				-D3
Double Ended Process Cover with 7/16 in, B7 Steel Bolting (Blind Kidney Flange on Back)				-D4
Single Ended Process Cover with 7/16 in, 316 ss Bolting				-D5
Double Ended Process Cover with 7/16 in, 316 ss Bolting (Blind Kidney Flange on Back)				-D6
Single Ended Process Cover with 7/16 in, 17-4 ss Bolting				-D7
Double Ended Process Cover with 7/16 in, 17-4 ss Bolting (Blind Kidney Flange on Back)				-D8
Cleaning and Preparation				
Unit Degreased - for Silicone Filled Sensors Only (Not for Oxygen/Chlorine/Other Fluids that may react with Silicone)				-X1
Cleaned and Prepared for Oxygen Service – for Fluorinert Filled Sensors Only				-X2
Cleaned and Prepared for Chlorine Service – for Fluorinert Filled Sensors Only (includes 17-4 ss bolting; therefore do not also specify Option –B2)				-X3
Bolting for Process Covers – Not Available with DIN 19213 Construction				
316 ss Bolts and Nuts				-B1
17-4 ss Bolts and Nuts				-B2
B7M Bolts and Nuts				-B3
Conduit Connectors				
Hawke-Type ½ NPT Cable Gland for use with Conduit Connection Codes 1 and 3				-A1
M20 Conduit Thread Adapter for use with Conduit Connection Codes 1 and 3				-A3

Electronics Housing Features
Custody Transfer Lock and Seal . . . . . -Z2

Tubing Connectors
316 ss, Connecting 6 mm Tubing to ¼ NPT Process Connector . . . . . -E3
316 ss, Connecting 12 mm Tubing to ½ NPT Process Connector . . . . . -E4

Vent Screw in Process Cover
Supply Vent Screw in Side of Each Process Cover. . . . . -V
(Available only on Traditional Process Cover Structure Codes 22 to 47
Omit Vent Screw in Side of Each Process Cover . . . . . -V1
(Available only on Type LP1 Low Profile Process Cover Structures Codes LL, LM, LC, and LD)

Adapters for Direct Mount to Competitive Manifolds
Adapter plate, Bolts, and Gaskets for Coplanar Manifolds . . . . . -P1
Not Available with:
Bolting Options -B1, -B2, and -B3;
DIN 19213 Construction Options -D1, -D2, -D4, -D5, -D6, -D7, and -D8

Instruction Books (Common MI, Brochure, and Full Documentation Set on CD-ROM is Standard)
Without Instruction Book and CD . . . . . -K1

Custom Factory Configuration
Digital Output (FoxCom Only). . . . . -C1
Full Factory Configuration (Requires Configuration Form to be Filled Out) . . . . . -C2

Miscellaneous Optional Selections
Low Temperature Operative Limits of Electronics Housing Extended down to -50°C (-58°F). . . . . -J
Supplemental Customer Tag (Stainless Steel Tag wired onto Transmitter) . . . . . -T
Five-Year Warranty. . . . . -W

IMV30 I/A Series® Multivariable Transmitter with Flow Rate Calculations

IMV30 MultiVariable Transmitter measures differential pressure and pressure and can transmit these measurements along with process temperature using an external RTD. Also calculates and transmits flow rate when so configured.

For complete specifications, refer to Product Specification Sheets PSS 2A-1C15 A and PSS 2A-1Z3 F.

- IMV30 Benefits:
  - *One transmitter replaces three separate transmitters, saving on initial purchase costs*
  - *Reduced process penetrations save money and reduce chance of fugitive emissions*
  - *Fewer transmitters, less wiring, and fewer shut off valves reduce installation costs*
  - *Greater reliability due to fewer devices and less wiring means less chance of losses from down time or process upsets*
  - *Calculates mass and volumetric flowrate, when used with primary flow elements*
  - *Flowrate values from the transmitter eliminate allocation of system resources for flowrate calculations, reducing system costs*
  - *Communicates all variables digitally*
  - *Provides assignable 4 to 20 mA output signal*
- Standard Warranty 5 Years

Functional Specifications

Span and Range Limits for Differential Pressure Measurement:

Span Limits Code	Span Limits		
	kPa	inH_2O	mbar
L*	0.12 and 2.5	0.5 and 10	1.2 and 25
A*	0.75 and 7.5	3 and 30	7.5 and 75
B	0.5 and 50	2 and 200	5 and 500
C	2.5 and 210	10 and 840	25 and 2100

Span Limits Code	Range Limits		
	kPa	inH_2O	mbar
L*	-2.5 and +2.5	-10 and +10	-25 and +25
A*	-7.5 and +7.5	-30 and +30	-75 and +75
B	-50 and +50	-200 and +200	-500 and +500
C	-210 and +210	-840 and +840	-2100 and +2100

Span and Range Limits for Absolute Pressure Measurement:

Span Limits Code	Span Limits		
	MPa	psia	bar or kg/cm^2
D	0.02 and 2.1	3 and 300	0.21 and 21
G**	0.07 and 3.5	10 and 500	0.7 and 35
E	0.21 and 10	30 and 1500	2.1 and 100

Span Limits Code	Range Limits		
	MPa	psia	bar or kg/cm^2
D	0 and 2.1	0 and 300	0 and 21
G**	0 and 3.5	0 and 500	0 and 35
E	0 and 10	0 and 1500	0 and 100

* A and L only available with Absolute Pressure Span Code G.
** G Only available with Differential Pressure Span Codes A and L.

Outputs:
- Differential Pressure, Pressure, Process Temperature, Electronics Temperature, Sensor Temperature, Flow Rate, and Density can be read from remote configurator.
- Measurements can be continually transmitted digitally to I/A Series systems using applicable FBMs.
- Any one measurement can be assigned to the 4 to 20 mA output signal.
- Up to four 4-20 mA output signals when used with HART Interface Module.
- Absolute Pressure for accurate flow rate calculations; transmit & display either absolute or gauge pressure.

PCMV Flow Rate Configurator:
- Windows-based software
- Configures IMV30 for specific flowrate applications

Transmitter Flow Rate Calculations:
- Liquids and gases
- Mass and volumetric calculations

Performance Specifications

Performance: (See Product Specification Sheet PSS 2A 1C15A for complete specifications)

Accuracy: DP & AP ±0.05% span

Flowrate: ±1.0% of flow rate for typical differential head applications

Physical Specifications

Enclosure Classification: Meets IEC IP66 and NEMA Type 4X.

Sensor Fill Fluid: Dow Corning dimethylsiloxane (DC 200) or fluorinated hydrocarbon (3M Fluorinert FC 77), as specified.

How to Order – Specify IMV30

Electronic Versions and Output Signals

Digital HART and 4 to 20 mA dc	-T

Structure Code – Process Covers, Sensors, Fill Fluids,

Cover Material	Sensor-Material	Fill Fluids	
316 ss	316L ss	Silicone	22
316 ss	316L ss	Fluorinert	23
316 ss	Hastelloy C	Silicone	26
316 ss	Hastelloy C	Fluorinert	27
Hastelloy C	Hastelloy C	Silicone	46
Hastelloy C	Hastelloy C	Fluorinert	47

Span Limits – Differential Pressure

kPa	inH_2O	mbar	
0.12 and 2.5	0.5 and 10	1.2 and 25	L
0.75 and 7.5	3 and 30	7.5 and 75	A
0.50 and 50	2 and 200	5 and 500	B
2.5 and 210	10 and 840	25 and 2100	C

Span Limits – Pressure

MPa	psia	bar or kg/cm^2	
0.02 and 2.1	3 and 300	0.21 and 21 N/A with DP Codes B and C	D
0.07 and 3.5	10 and 500	0.07 and 35 N/A with DP Codes L and A	G
0.21 and 10	30 and 1500	2.1 and 100 N/A with DP Codes B and C	E

Process Connector Type (Material Same as Process Cover Material)

None, Covers Tapped for ¼ NPT	0
¼ NPT	1
½ NPT	2
Rc ¼	3
Rc ½	4
½ Schedule 80 Welding Neck	6

Conduit Connection and Housing Material

½ NPT, Aluminum Housing	1
PG 13.5, Aluminum Housing	2
½ NPT, 316 ss Housing	3
PG 13.5, 316 ss Housing	4
M20 Connection, Aluminum Housing	5
M20 Connection, 316 ss Housing	6

Electrical Safety (See PSS for Description and Restrictions)

ATEX II GD, EEx ia IIC, or II ½ GD, EEx ib IIC	E
ATEX Flameproof; II 2 GD, EEx d IIC, Zone 1	D
ATEX II 3 GD, EEx nL IIC	N
ATEX Multiple Certifications (E, D, and N)	M
CSA Certified	C
CSA Certified (including Flameproof Zones)	B
FM approved	F
FM approved (including Flameproof Zones)	G

Optional Selections

Mounting Bracket Set – Specify Only One

Mounting Bracket Set, Painted Steel Bracket with Plated Steel Bolts	-M1
Mounting Bracket Set, 316 ss Bracket with 316 ss Bolts	-M2

Digital Indicator with Pushbuttons

Digital Indicator, Pushbuttons, and Window Cover	-L1

DIN 19213 Construction used with Process Connector Code "0" Only–Specify Only One

Single Ended Process Cover with M10 Bolting	-D1
Double Ended Process Cover with M10 Bolting (Blind Kidney Range on Back)	-D2
Single Ended Process Cover with 7/16 inch Bolting	-D3
Double Ended Process Cover with 7/16 inch Bolting (Blind Kidney Flange on Back)	-D4
Single Ended Process Covers with 316 ss 7/16 inch Bolting	-D5
Double Ended Process Covers with 316 ss 7/16 inch Bolting (Blind Kidney Flange on Back)	-D6
Single Ended Process Covers with 17-4 ss 7/16 inch Bolting	-D7
Double Ended Process Covers with 17-4 ss 7/16 inch Bolting (Blind Kidney Flange on Back)	-D8

Cleaning and Preparation – Specify Only One

Unit Degreased (not for Oxygen/Chlorine Service) (Available only with Structure Codes having Silicone)	-X1
Cleaned and Prepared for Oxygen Service (Available only with Structure Codes having Fluorinert)	-X2
Cleaned and Prepared for Chlorine Service (Available only with Structure Codes having Fluorinert) (Includes 17-4 ss bolts; do not specify Option B2)	-X3

Bolting for Process Covers/Connectors – Specify Only One

316 ss Bolts and Nuts	-B1
17-4 ss Bolts and Nuts	-B2
B7M Bolts and Nuts	-B3

Conduit Thread Adapters – Specify Only One

Hawk-Type ½ NPT Cable Gland for use with Conduit Connection Code 1 & 3	-A1
Plastic PG 13.5 Connector for use with Conduit Connection Codes 2 & 4	-A2
M20 Connector for use with Conduit Connection Codes 1 & 3	-A3
Trumpet shaped PG 13.5 Cable Gland (Nickel Plated Brass) for use with Conduit Connection Codes 2 & 4	-A4

Electronics Housing Features

Custody Transfer Lock and Seal	-Z2

Custom Configuration – Specify Only One

Digital Output (4 to 20 mA Default if not selected)	-C1
Full Factory Configuration	-C2

Ermeto Connectors–Specify Only One

316 ss, Connecting 6 mm Tubing to ¼ NPT Process Connector	-E3
316 ss, Connecting 12 mm Tubing to ½ NPT Process Connector	-E4

Miscellaneous Optional Selections

Low Temperature Operative Limits of Electronics Housing Extended down to -50°C (-58°F)	-J
Supplemental Customer Tag	-T
Vent Screw in Side of Each Process Cover (Not available with DIN 19213 Construction)	-V
Five-Year Warranty	-W

IMV31 I/A Series® Multivariable Transmitter with Tank Level Calculations

IMV31 MultiVariable Transmitter measures differential pressure and pressure and can transmit these measurements along with process temperature using an external RTD. Also calculates and transmits tank level when so configured.

For complete specifications, refer to Product Specification Sheets PSS 2A-1C15 C and PSS 2A-1Z3 F.

- IMV31 Benefits:
  - *One transmitter replaces three separate transmitters, saving on initial purchase costs*
  - *Reduced process penetrations save money and reduce chance of fugitive emissions*
  - *Fewer transmitters, less wiring, and fewer shut off valves reduce installation costs*
  - *Greater reliability due to fewer devices and less wiring means less chance of losses from down time or process upsets*
  - *Calculates tank level, compensated for varying density. Requires a liquid whose density is a known function of pressure and temperature.*
  - *Communicates all variables digitally*
  - *Provides assignable 4 to 20 mA output signal*
- Standard Warranty 5 Years

Functional Specifications

Span and Range Limits for Differential Pressure Measurement:

Span Limits Code	Span Limits		
	kPa	inH_2O	mbar
A*	0.75 and 7.5	3 and 30	7.5 and 75
B	0.5 and 50	2 and 200	5 and 500
C	2.5 and 210	10 and 840	25 and 2100

Span Limits Code	Range Limits		
	kPa	inH_2O	mbar
A*	-7.5 and +7.5	-30 and +30	-75 and +75
B	-50 and +50	-200 and +200	-500 and +500
C	-210 and +210	-840 and +840	-2100 and +2100

Span and Range Limits for Absolute Pressure Measurement:

Span Limits Code	Span Limits		
	MPa	psia	bar or kg/cm^2
D	0.02 and 2.1	3 and 300	0.21 and 21
G**	0.07 and 3.5	10 and 500	0.7 and 35
E	0.21 and 10	30 and 1500	2.1 and 100

Span Limits Code	Range Limits		
	MPa	psia	bar or kg/cm^2
D	0 and 2.1	0 and 300	0 and 21
G**	0 and 3.5	0 and 500	0 and 35
E	0 and 10	0 and 1500	0 and 100

* A only available with Absolute Pressure Span Code G.
** G only available with Differential Pressure Span Code A.

Outputs:

- Differential Pressure, Tank Pressure, Process Temperature, Electronics Temperature, Sensor Temperature, Tank Level, and Density can be read from remote configurator.
- Measurements can be transmitted digitally to I/A Series systems using HART FBMs.
- One measurement (Level, Pressure, DP, or Density) can be assigned to the 4 to 20 mA output signal.
- Up to four 4-20 mA output signals when used with HART Interface Module.

PCMV Level Configurator:

- Windows-based software
- Configures IMV31 for specific tank level applications

Performance Specifications

Performance: (See Product Specification Sheet PSS 2A 1C15C for complete specifications).

Accuracy: DP & AP ±0.05% span

Level: ±0.3% of maximum level (conditions in PSS).

Physical Specifications

Enclosure Classification: Meets IEC IP66 and NEMA Type 4X.

Sensor Fill Fluid: Dow Corning dimethylsiloxane (DC 200) or fluorinated hydrocarbon (3M Fluorinert FC 77), as specified.

How to Order – Specify IMV31

Electronic Versions and Output Signals

4 to 20 mA/ HART	-T

Structure Code – Process Covers, Sensors, Fill Fluids,

Cover Material	Sensor-Material	Fill Fluids	
316 ss	316L ss	Silicone	22
316 ss	316L ss	Fluorinert	23
316 ss	Hastelloy C	Silicone	26
316 ss	Hastelloy C	Fluorinert	27
Hastelloy C	Hastelloy C	Silicone	46
Hastelloy C	Hastelloy C	Fluorinert	47

Span Limits – Differential Pressure

kPa	inH_2O	mbar	
0.75 and 7.5	3 and 30	7.5 and 75	A
0.50 and 50	2 and 200	5 and 500	B
2.5 and 210	10 and 840	25 and 2100	C

Span Limits – Pressure

MPa	psia	bar or kg/cm^2	
0.02 and 2.1	3 and 300	0.21 and 21 with DP Codes B and C	D
0.07 and 3.5	10 and 500	0.07 and 35 with DP Code A	G
0.21 and 10	30 and 1500	2.1 and 100 with DP Codes B and C	E

Process Connector Type (Material Same as Process Cover Material)

None, Covers Tapped for 1/4NPT	0
¼ NPT	1
½ NPT	2
Rc ¼	3
Rc ½	4
½ Schedule 80 Welding Neck	6

Conduit Connection and Housing Material

½ NPT, Aluminum Housing	1
PG 13.5, Aluminum Housing	2
½ NPT, 316 ss Housing	3
PG 13.5, 316 ss Housing	4
M20 Connection, Aluminum Housing	5
M20 Connection, 316 ss Housing	6

Electrical Safety (See PSS for Description and Restrictions)

ATEX II GD, EEx ia IIC, or II ½ GD, EEx ib IIC	E
ATEX Flameproof; II 2 GD, EEx d IIC, Zone 1	D
ATEX II 3 GD, EEx nL IIC	N
ATEX Multiple Certifications (E, D, and N)	M
CSA Certified	C
CSA Certified (including Flameproof Zones)	B
FM approved	F
FM approved (including Flameproof Zones)	G

Optional Selections

Mounting Bracket Set – Specify Only One

Mounting Bracket Set, Painted Steel Bracket with Plated Steel Bolts	-M1
Mounting Bracket Set, 316 ss Bracket with 316 ss Bolts	-M2

Digital Indicator with Pushbuttons

Digital Indicator, Pushbuttons, and Window Cover	-L1

DIN 19213 Construction used with Process Connector Code "0" Only–Specify Only One

Single Ended Process Cover with M10 Bolting	-D1
Double Ended Process Cover with M10 Bolting (Blind Kidney Range on Back)	-D2
Single Ended Process Cover with 7/16 inch Bolting	-D3
Double Ended Process Cover with 7/16 inch Bolting (Blind Kidney Flange on Back)	-D4
Single Ended Process Covers with 316 ss 7/16 inch Bolting	-D5
Double Ended Process Covers with 316 ss 7/16 inch Bolting (Blind Kidney Flange on Back)	-D6
Single Ended Process Covers with 17-4 ss 7/16 inch Bolting	-D7
Double Ended Process Covers with 17-4 ss 7/16 inch Bolting (Blind Kidney Flange on Back)	-D8

Cleaning and Preparation – Specify Only One

Unit Degreased (not for Oxygen/Chlorine Service) (Available only with Structure Codes having Silicone)	-X1
Cleaned and Prepared for Oxygen Service (Available only with Structure Codes having Fluorinert)	-X2
Cleaned and Prepared for Chlorine Service (Available only with Structure Codes having Fluorinert) (Includes 17-4 ss bolts; do not specify Option B2)	-X3

Bolting for Process Covers/Connectors – Specify Only One

316 ss Bolts and Nuts	-B1
17-4 ss Bolts and Nuts	-B2
B7M Bolts and Nuts	-B3

Conduit Thread Adapters – Specify Only One

Hawk-Type ½ NPT Cable Gland for use with Conduit Connection Code 1 & 3	-A1
Plastic PG 13.5 Connector for use with Conduit Connection Codes 2 & 4	-A2
M20 Connector for use with Conduit Connection Codes 1 & 3	-A3
Trumpet shaped PG 13.5 Cable Gland (Nickel Plated Brass) for use with Conduit Connection Codes 2 & 4	-A4

Electronics Housing Features

Custody Transfer Lock and Seal	-Z2

Custom Configuration – Specify Only One

Digital Output (4 to 20 mA Default if not selected)	-C1
Full Factory Configuration	-C2

Ermeto Connectors–Specify Only One

316 ss, Connecting 6 mm Tubing to ¼ NPT Process Connector	-E3
316 ss, Connecting 12 mm Tubing to ½ NPT Process Connector	-E4

Miscellaneous Optional Selections

Low Temperature Operative Limits of Electronics Housing Extended down to -50°C (-58°F)	-J
Supplemental Customer Tag	-T
Vent Screw in Side of Each Process Cover (Not available with DIN 19213 Construction)	-V
Five-Year Warranty	-W

IPI10 Pneumatic-to-Current Converters

The IPI10 Field-Mounted Pneumatic-to-Current Converters receive a standard pneumatic signal and transmit a proportional 4 to 20 mA dc signal.

For complete specifications, refer to Product Specification Sheet PSS 2A-2A4 A.

- High Performance
  - ✔ *± 0.075% span accuracy and minimized temperature effects*
  - ✔ *provide interface between pneumatic transmitters and electronic control equipment up to 1.6 kilometres (1 mile) away*
- Weatherproof
  - ✔ *field mounted enclosure is both sealed and durable, meeting IEC IP66 and NEMA Type 4X requirements*

Performance Specifications

Accuracy: ±0.075% of calibrated span

Physical Specifications

Connections:
Electrical: Screw terminal
Pneumatic: ¼ NPT, internal thread
Conduit: ½ NPT both sides.

Measurement Connection Material: 316L ss

Mounting: Field. Nominal DN 50 (2 in) pipe with mounting bracket.

Enclosure Classification: Meets IEC IP66 and NEMA Type 4X

Functional Specifications

Input Signals: See How to Order

Ambient Temperature Limits: -40 and +85°C (-40 and +185°F)

Electrical Classification: FM and CSA, certified. Refer to Foxboro for complete specifications.

Configuration and Calibration: Pushbutton

Power Requirements: Requires external dc power for operation. See "Output Signal" table below.

Output Signal

Output Signal	Supply Voltage From Separate Unit (V dc)			Allowable Loop Load (ohms) at Nominal Supply Voltage	
	min.	nom.	max.	min.	max.
4 to 20 mA dc	11.5	24	42	0	1450

How to Order—Specify model number IPI10 followed by order code for each selection

Electronics Version and Output Signal							
Electronic; 4 to 20 mA Analog Output	-A						
Input Signal							
3 to 15 psi		2					
3 to 27 psi		3					
0.2 to 1.0 kg/cm^2		4					
20 to 100 kPa		5					
0.2 to 1.0 bar		6					
Conduit Connections and Housing Material							
½ NPT, Aluminum Housing			2				
½ NPT, 316 ss Housing			4				
Electrical Safety							
CSA Certified, Division 1 Explosionproof and Division 2				C			
FM Approved, Division 1 Explosionproof and Nonincendive				F			
SAA Certified Ex, d, IIC, Flameproof				A			
SAA Certified Ex, n, IIC, Nonincendive				K			
Optional Selections							
Indicator with Pushbuttons							
Window cover to allow viewing of internal LCD indicator when in service					-L3		
Electronics Housing Features—Specify Only One							
External Zero Adjustment						-Z1	
Custody Transfer Lock and Seal						-Z2	
External Zero Adjustment and Custody Transfer Lock and Seal						-Z3	
Instruction Books							
Without Instruction Book and CD							-K1
Miscellaneous Optional Selections							
Five-Year Warranty							-W
Supplemental Customer Tag (Stainless Steel Tag wired onto Transmitter)							-T
Without Mounting Bracket Assembly							-Y

Specify information for instrument tag

Pressure Seals and Industry Connections for use with I/A Series® Pressure Transmitters

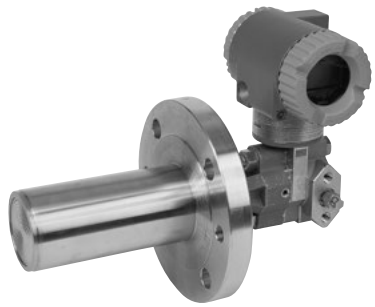

Pressure seals are used with the I/A Series Pressure Transmitters when it is necessary to keep the transmitter isolated from the process. A sealed system is used for a process fluid that may be corrosive, viscous, subject to temperature extremes, toxic, sanitary, or tend to collect and solidify.

The following Product Specification Sheets provide complete details:
- *PS Series Pressure Seals: PSS 2A-1Z11A*
- *Sanitary Structure Codes: TA-TB, T2-T5, PX-PZ, and M1-M9: PSS 2A-1C13K*
- *Pulp and Paper Structure Codes: PA-PJ: PSS 2A-1C13L*

■ Features:
- ✔ *Selection of Flanged Level or Flanged Remote Mount Seals with Flush or Extended Diaphragms.*
- ✔ *Recessed Diaphragm Seals for Direct or Remote Mount with Flanged, In-Line Saddle Weld or Threaded Process Connections.*
- ✔ *Sanitary Flush or Extended Diaphragm Seals offered that meet FDA and 3A Requirements. Sanitary Ends secured to Process with Tri-Clover Tri-Clamps or Threaded Connections.*
- ✔ *Pulp and Paper Industry Connections in 1 and 1½ inch Sleeve and Threaded Versions.*
- ✔ *Flanged Seals with ANSI or BS/DIN Carbon or Stainless Steel Flanges in many Sizes and Ratings.*
- ✔ *Seals with Threaded Process Connections from ¼ to 1½ NPT.*
- ✔ *In-Line, Saddle Weld Seals for 3 or 4 inch (and larger) Process Pipes.*
- ✔ *Numerous Seal Sizes available depending on the Seal Model Selected.*
- ✔ *Diaphragms, Flush or Extended to reach the Process Fluid. Available with nominal Extension Lengths of 0 (zero), 38, 50, 100, 150, and 229 mm (0, 1.5, 2, 4, 6, and 9 in) depending on seal type.*
- ✔ *Capillary Lengths from 1.5 to 9 m (5 to 30 ft) with Flexible Armor, or Flexible Armor with a Protective Coating.*
- ✔ *Standard 316L ss, Hastelloy C, Titanium, Monel, and Inconel are offered as Diaphragm Materials consistent with the Seal Configuration selected.*
- ✔ *Fill Fluids accommodate Process Temperatures ranging from –59 to +304˚C (-75 to +580˚F)*

■ Standard Warranty 5 Years

Pressure Seals and Industry-Specific Connections for Use with I/A Series Pressure Transmitters

Mounting	Description	Connection Type	Identification Number	Used With Transmitter Model
Seal Mounted Directly on Transmitter	Flush or Extended Diaphragm Seal for DP or GP Transmitter (Flanged Level Transmitter)	ANSI or DIN Flange	Seal Model Code: PSFLT	IDP10, IDP25, & IGP20
	Recessed Diaphragm Seal, for use on AP or GP Transmitters	ANSI Flange	Seal Model Code: PSFAD	IAP10, IGP10, & IGP25
		NPT Threaded	Seal Model Code: PSTAD	
	Extended Diaphragm Seal with Pulp & Paper Connection, for use on AP or GP Transmitters	Pulp & Paper Threaded and Sleeve Types	Transmitter Structure Codes: PA – PJ	IAP10, IGP10, & IGP25
	Flush Diaphragm Seal with Tri-Clamp Connection, for use on AP or GP Transmitters	Sanitary Tri-Clamp	Transmitter Structure Codes: TA-TB, or T2-T5	IAP10, IGP10 & IGP25
	Extended Diaphragm Seal with Threaded Connection, for use on AP or GP Transmitters	Sanitary Threaded	Transmitter Structure Codes: PX and PZ	IAP10, IGP10, & IGP25
	Flush Diaphragm Seal with Tri-Clamp Connection, for use on DP or GP Transmitters	Sanitary Tri-Clamp	Seal Model Code: PSSCT	IDP10, IDP25, & IGP20
	Extended Diaphragm Seal with Tri-Clamp Connection, for use on AP or GP Transmitters	Sanitary Tri-Clamp	Transmitter Structure Codes: M1, M6, & M9	IAP10, IGP10, & IGP25
	Extended Diaphragm Seal with Tri-Clamp Connection, for use on DP or GP Transmitters	Sanitary Tri-Clamp	Seal Model Code: PSSST	IDP10, IDP25, & IGP20
	In-Line Saddle Weld Seal for 3- or 4-inch Nominal Pipe Size	Saddle Weld	Seal Model Code: PSISD	IAP10, IGP10, & IGP 25
Remote Seal, Capillary Connected to Transmitter	Flush Diaphragm Seal for use with AP, GP, or DP Transmitters	ANSI or DIN Flange	Seal Model Code: PSFPS	IAP10, IAP20, IGP10, IGP20 IGP25, IDP10, & IDP25
	Extended Diaphragm Seal for use with AP, GP, or DP Transmitters	ANSI or DIN Flange	Seal Model Code: PSFES	
	Recessed Diaphragm Seal, for use with AP, GP, or DP Transmitters	ANSI Flange	Seal Model Code: PSFAR	
		NPT Threaded	Seal Model Code: PSTAR	
	Flush Diaphragm Seal with Tri-Clamp Connection, for use on AP, GP, or DP Transmitters	Sanitary Tri-Clamp	Seal Model Code: PSSCR	
	Extended Diaphragm Seal with Tri-Clamp Connection, for use on AP, GP, or DP Transmitters	Sanitary Tri-Clamp	Seal Model Code: PSSSR	
	In-Line Saddle Weld Seal for 3- or 4-inch Nominal Pipe Size	Saddle Weld	Seal Model Code: PSISR	

Pressure Seals and Industry Connections for Use with I/A Series Pressure Transmitters

How to Specify:

1. Select the transmitter Model Code from Section 1, including its two-character Structure Code. For example IGP10-AT2C1F-M1, where "T2" is the Structure Code. The Structure Code always consists of the second and third characters after the first dash.
2. If the transmitter Structure Code starts with letters M, P, or T, the model code is complete. No additional seal information is required. You can use this section to review your selection and confirm that it meets your requirements.
3. If the transmitter Structure Code is D1 to D5, F1 to F4, or S1 to S6, specify a separate Pressure Seal Model Code from this section. A seal model code is used when a lot of information is required to define the seal.
4. If the transmitter Structure Code is SA to SJ, the transmitter is prepared for the attachment of non-Foxboro seals by others.

Examples:

IDP10 d/p Cell Transmitter with Flanged Level Seal
Transmitter: IDP10-TF1C01F-L1 (Qty 1)
Flanged Level Seal: PSFLT-B2S0E51 (Qty 1)

IDP10 d/p Cell Transmitter with Dual Remote Flanged Flush Diaphragm Seals
Transmitter: IDP10-DS1B01F-L1
Remote Flanged Seals: PSFPS-A2S0E344B (Qty 2)

IGP10 Gauge Pressure Transmitter with Direct Connect Threaded Seal
Transmitter: IGP10-TD1D1F-L1 (Qty 1)
Threaded Seal: PSTAD-2UCCK2SAC1 (Qty 1)

IDP10 d/p Cell Transmitter with Flanged Level Seal & Remote Flanged Seal
Transmitter: IDP10-AF3C01D (Qty 1)
Flanged Level Seal: PSFLT-B2S0E51 (Qty 1)
Remote Flanged Seal: PSFAR-C322SSKSA014C (Qty 1)

IAP10 Absolute Pressure Transmitter with Direct Connect Tri-Clamp Sanitary Seal
Transmitter with Seal: IAP10-TPZC1F-L1

PSFLT Series — Flanged, Direct Mount (Flanged Level) Pressure Seals with Flush or Extended Diaphragm

PSFLT with Flush Diaphragm Seal shown with IDP10 Transmitter

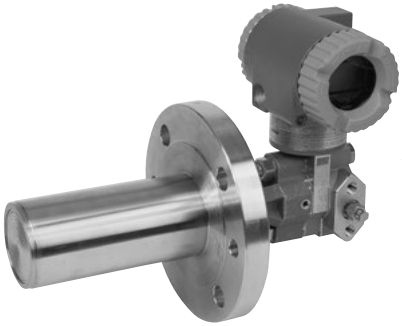

PSFLT with Extended Diaphragm Seal shown with IDP10 Transmitter

The PSFLT Series Flanged Level Seals are used with the IDP10, IDP25, and IGP20 Series Differential and Gauge Pressure Transmitters for determination of liquid level, interface level, or density in open, pressurized, or evacuated vessels. This Transmitter-Seal System provides a reliable, precise measurement.

How to Order – Specify Complete Transmitter Model Number and Specify: PSFLT

Seal Orientation

Seal is for High Side of IDP10, IDP25, or IGP20	-B

Structure Number (Flange Size, Seal Wetted Material, and Extension Length)

Flange Size	Seal Wetted Material	Extension Length	
2 in (50 mm)	316L ss	Flush	2S0
2 in (50 mm)	Hastelloy C	Flush	2C0
2 in (50 mm)	Tantalum	Flush	2T0
3 in (80 mm)	316L ss	Flush	3S0
3 in (80 mm)	Hastelloy C	Flush	3C0
3 in (80 mm)	Tantalum	Flush	3T0
2 in (50 mm)	316L ss	2 in (50 mm)	2S2
2 in (50 mm)	Hastelloy C	2 in (50 mm)	2C2
2 in (50 mm)	316L ss	4 in (100 mm)	2S4
2 in (50 mm)	Hastelloy C	4 in (100 mm)	2C4
2 in (50 mm)	316L ss	6 in (150 mm)	2S6
2 in (50 mm)	Hastelloy C	6 in (150 mm)	2C6
3 in (80 mm)	316L ss	2 in (50 mm)	3S2
3 in (80 mm)	Hastelloy C	2 in (50 mm)	3C2
3 in (80 mm)	316L ss	4 in (100 mm)	3S4
3 in (80 mm)	Hastelloy C	4 in (100 mm)	3C4
3 in (80 mm)	316L ss	6 in (150 mm)	3S6
3 in (80 mm)	Hastelloy C	6 in (150 mm)	3C6
4 in (100 mm)	316L ss	2 in (50 mm)	4S2
4 in (100 mm)	Hastelloy C	2 in (50 mm)	4C2
4 in (100 mm)	316L ss	4 in (100 mm)	4S4
4 in (100 mm)	Hastelloy C	4 in (100 mm)	4C4
4 in (100 mm)	316L ss	6 in (150 mm)	4S6
4 in (100 mm)	Hastelloy C	6 in (150 mm)	4C6

Flange Rating and Material (non-process wetted)

ANSI Class 150, Carbon Steel	1
ANSI Class 300, Carbon Steel	2
ANSI Class 600, Carbon Steel	3
BS and DIN PN 10/40, Carbon Steel	A
BS and DIN PN 10/16, Carbon Steel	C
BS and DIN PN 25/40, Carbon Steel	D
ANSI Class 150, 316 ss	E
ANSI Class 300, 316 ss	F
ANSI Class 600, 316 ss	G
BS and DIN PN 10/40, 316 ss	H
BS and DIN PN 10/16, 316 ss	R
BS and DIN PN 25/40, 316 ss	T

Instrument Connection

Bolted, gasketed	5

Fill Fluid – Pressure Seal

Fill Fluid	Temperature Limits °C	Temperature Limits °F	
DC200, 10 cSt Silicone	- 40 and +204	- 40 and +400	1
FC77, Fluorinert	- 59 and +82	- 75 and +180	2
DC200, 3 cSt silicone	- 40 and +149	- 40 and +300	3
DC704, Silicone	- 12 and +204	10 and 400	4
Neobee M20	- 18 and +204	0 and 400	5

Optional Selections

Extended Diaphragm Diameter Reduced to:

Diameter	Used with the following Structure and Flange Rating/Material Codes shown above	
1.841 to 1.861 in	2S21, 2S2E, 2S41, 2S4E, 2S61, 2S6E	-D2
2.772 to 2.792 in	3S21, 3S2E, 3S41, 3S4E, 3S61, 3S6E	-D3

PSFPS and PSFES Series – Flanged Connection, Remote Mount Pressure Seals with Flush or Extended Diaphragm

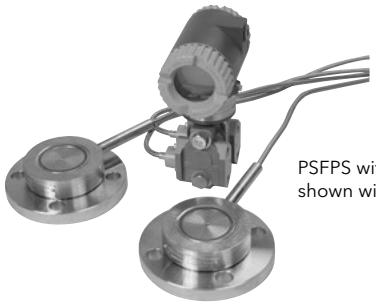

PSFPS with Flush Diaphragm Seals shown with IDP10 Transmitter

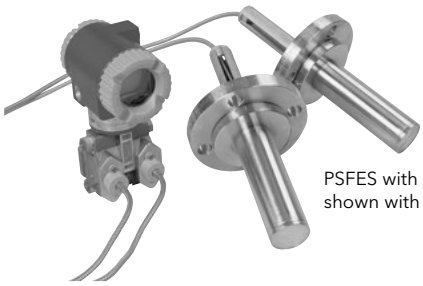

PSFES with Extended Diaphragm Seals shown with IDP10 Transmitter

The PSFPS and PSFES with Remote Mount, Flush or Extended Diaphragm Seals are used with the IDP10, IDP25, IGP10, IGP20, IGP25, IAP10, and IAP20 Series Differential, Gauge, and Absolute Pressure Transmitters. The transmitter can be mounted in a remote location with interconnecting capillary lengths up to 9 m (30 ft). This Transmitter-Seal System provides a reliable, precise measurement.

How To Order – Specify Complete Transmitter Model Number and Specify: PSFPS or PSFES

Seal Orientation

Two Seal System, Balanced, Same Model Numbered Seal on both Sides, IDP10 and IDP25 only	-A(a)
One Seal System, High Side, IDP10, IDP25, IGP20, or IAP20	-B
One Seal System, Low Side, IDP10 or IDP25 only	-C
One Seal System, IGP10, IGP25, or IAP10 only	-D

Structure Code – Flange Size, Seal Wetted Material, and Extension Length

Flange Size	Seal Wetted	Extension Length	
50 mm (2 in)	316 ss	Flush (with PSFPS Seals only)	2S0
50 mm (2 in)	Hastelloy C	Flush (with PSFPS Seals only)	2C0
50 mm (2 in)	Tantalum	Flush (with PSFPS Seals only)	2T0
80 mm (3 in)	316 ss	Flush (with PSFPS Seals only)	3S0
80 mm (3 in)	Hastelloy C	Flush (with PSFPS Seals only)	3C0
80 mm (3 in)	Tantalum	Flush (with PSFPS Seals only)	3T0
50 mm (2 in)	316 ss	50 mm (2 in) – (with PSFES Seals only)	2S2
50 mm (2 in)	Hastelloy C	50 mm (2 in) – (with PSFES Seals only)	2C2
50 mm (2 in)	316 ss	100 mm (4 in) – (with PSFES Seals only)	2S4
50 mm (2 in)	Hastelloy C	100 mm (4 in) – (with PSFES Seals only)	2C4
50 mm (2 in)	316 ss	150 mm (6 in) – (with PSFES Seals only)	2S6
50 mm (2 in)	Hastelloy C	150 mm (6 in) – (with PSFES Seals only)	2C6
80 mm (3 in)	316 ss	50 mm (2 in) – (with PSFES Seals only)	3S2
80 mm (3 in)	Hastelloy C	50 mm (2 in) – (with PSFES Seals only)	3C2
80 mm (3 in)	316 ss	100 mm (4 in) – (with PSFES Seals only)	3S4
80 mm (3 in)	Hastelloy C	100 mm (4 in) – (with PSFES Seals only)	3C4
80 mm (3 in)	316 ss	150 mm (6 in) – (with PSFES Seals only)	3S6
80 mm (3 in)	Hastelloy C	150 mm (6 in) – (with PSFES Seals only)	3C6

100 mm (4 in)	316 ss	50 mm (2 in) – (with PSFES Seals only)	4S2
100 mm (4 in)	Hastelloy C	50 mm (2 in) – (with PSFES Seals only)	4C2
100 mm (4 in)	316 ss	100 mm (4 in) – (with PSFES Seals only)	4S4
100 mm (4 in)	Hastelloy C	100 mm (4 in) – (with PSFES Seals only)	4C4
100 mm (4 in)	316 ss	150 mm (6 in) – (with PSFES Seals only)	4S6
100 mm (4 in)	Hastelloy C	150 mm (6 in) – (with PSFES Seals only)	4C6

Flange Rating and Material (non-process wetted)

ANSI Class 150, Carbon Steel	1
ANSI Class 300, Carbon Steel	2
ANSI Class 600, Carbon Steel	3
BS and DIN PN 10/40 (for 50 and 80 mm only), Carbon Steel	A
BS and DIN PN 10/16 (for 100 mm only), Carbon Steel (PSFES Seals Only)	C
BS and DIN PN 25/40 (for 100 mm only), Carbon Steel (PSFES Seals Only)	D
ANSI Class 150, 316 ss	E
ANSI Class 300, 316 ss	F
ANSI Class 600, 316 ss	G
BS and DIN PN 10/40 (for 50 and 80 mm only), 316 ss	H
BS and DIN PN 10/16 (for 100 mm only), 316 ss (PSFES Seals Only)	R
BS and DIN PN 25/40 (for 100 mm only), 316 ss (PSFES Seals Only)	T
Flange Provided by User (PSFPS Seals Only)	Y

Instrument Connections

Capillary Welded at the Transmitter and at the Seal	3

Fill Fluid – Pressure Seal and Capillary

Fill Fluid	Temperature Limits °C	°F	
DC200, 10 cSt Silicone	40 and +232	-40 and +450	
FC77, Fluorinert	-59 and +82	-75 and +180	2
DC200, 3 cSt Silicone	-40 and +149	-40 and +300	3
DC704, Silicone	-12 and +304	10 and 580	4
Neobee M20	-18 and +204	0 and 400	5

Capillary Internal Diameter

0.027 inches; Not Available with DC704 Silicone, Fill Fluid Code 4	3
0.040 inches	4
0.062 inches; not available with IGP10, IGP25, or IAP10	6

Capillary Length and Type

1.5 m (5 ft) 316 ss Flexible Armor	A
3.0 m (10 ft) 316 ss Flexible Armor	B
4.5 m (15 ft) 316 ss Flexible Armor	C
6.0 m (20 ft) 316 ss Flexible Armor	D
7.5 m (25 ft) 316 ss Flexible Armor	E
9.0 m (30 ft) 316 ss Flexible Armor	F
1.5 m (5 ft) 316 ss Flexible Armor, Protective Coat	G
3.0 m (10 ft) 316 ss Flexible Armor, Protective Coat	H
4.5 m (15 ft) 316 ss Flexible Armor, Protective Coat	J
6.0 m (20 ft) 316 ss Flexible Armor, Protective Coat	K
7.5 m (25 ft) 316 ss Flexible Armor, Protective Coat	L
9.0 m (30 ft) 316 ss Flexible Armor, Protective Coat	M

a) Specify quantity of 2 seals when Seal Orientation code "A" is specified.

PSFAR and PSFAD Series – Flanged Connection, Remote or Direct Mount Pressure Seals with Recessed Diaphragms

PSFAR Flanged, Remote Mount shown with IDP10 Transmitter

PSFAD Flanged, Direct Mount shown with IGP10 Transmitter

The PSFAR with Flanged Remote Mount Recessed Diaphragm Seals are used with the IDP10, IDP25, IGP10, IGP20, IGP25, IAP10, and IAP20 Series Differential, Gauge, and Absolute Pressure Transmitters. The PSFAD with Direct Mount, Recessed Diaphragm Seals are used with the IGP10, IGP25, and IAP10 Gauge and Absolute Pressure Transmitters. These Transmitter-Seal Systems provide precise, reliable measurements and have a wide variety of sizes and materials.

How To Order – Specify Complete Transmitter Model Number and Specify: PSFAR or PSFAD

Seal Orientation – PSFAR Seals Only; for PSFAD Seals, go to Diaphragm Size Selection

Two Seal System, Balanced, Same Seal on both Sides, IDP10 or IDP25 only	-A(a)
One Seal System, High Side, IDP10, IDP25, IGP20, or IAP20	-B
One Seal System, Low Side, IDP10 or IDP25 only	-C
One Seal System, IGP10, IGP25, or IAP10 only	-D

Diaphragm Size

2.4 in (Recommended Standard for IGP10, IGP25, and IAP10)	2
3.0 in (Recommended Standard for IDP10, IDP25, IGP20, and IAP20)	3
4.0 (for Optimal Temperature Performance) – used with PSFAR only	4

Process Connector (Same Material as Upper Housing)

½ in Raised Face Flange	A
¾ in Raised Face Flange	B
1 in Raised Face Flange	1
1½ in Raised Face Flange	C
2 in Raised Face Flange	2
3 in Raised Face Flange	3

Flange Rating

ANSI Class 150	1
ANSI Class 300	2
ANSI Class 600	3
ANSI Class 1500	4

Lower Housing Material (Process Wetted)

316 ss	S
Carbon Steel	K
Hastelloy C	C
Tantalum Plate; standard with Tantalum Diaphragm	T
Titanium grade 4	E
Inconel 600	L
Monel 400	M
Nickel 200	N
Glass Filled ptfe (Teflon) (b)	G
Polyvinyl Chloride (PVC) (b)	P

Diaphragm Material

316 ss	S
Hastelloy C276	C
Tantalum; standard with Tantalum Lower Housing	T
Titanium Grade 2 (must specify Titanium Upper Housing)	E
Inconel 600	L
Monel 400 (must specify Monel Upper Housing)	M
Nickel 200	N

Upper Housing Material (Non-Process Wetted)

316L ss	S
316L ss with Monel 400 Insert	M
316L ss with Titanium Grade 4 Insert	E

Instrument Connection

PSFAR Only – Capillary-to-transmitter welded; capillary-to-seal ¼ NPT	1
PSFAD Only – ½ NPT	2

Gasket

Organic Fiber with Nitrile; Standard with Class 150 and Class 300 Flange Rating	S
316 ss, Silver Plated; Standard with Class 600 and Higher Flange Rating	3
ptfe (Teflon); Standard with Nonmetallic Lower Housings	T
Buna N	B
Viton	V
Grafoil	G
Hastelloy C, Silver Plated	C

Flushing Connector

None	A
¼ NPT	B
Dual ¼ NPT	C

Bolting – Used with Stud Mounting Configuration

None/Not Applicable – See Note[c]	0
Carbon Steel (Standard Construction)	C
High Strength 300 Series ss (for ANSI Class 600 and Higher	H
300 Series ss (for ANSI Class 300 and Lower)	S

Fill Fluid – Pressure Seal and Capillary (capillary applies to PSFAR only)

Fill Fluid	Temperature Limits °C	°F	
DC200, 10 cSt Silicone	-40 and +232	-40 and +450[d]	1
FC77, Fluorinert	-59 and +82	-75 and +180	2
DC200, 3 cSt Silicone	-40 and +149	-40 and +300	3
DC704, Silicone	-12 and +304	10 and 580[d]	4

Capillary Internal Diameter – Select for PSFAR Seals Only

0.027 in; Not Available with Fluid Code 4 (DC704 Silicone)	3
0.040 in	4
0.062 in; Not Available with IAP10, IGP10, and IGP25 Transmitters	6

Capillary Length and Type – Select for PSFAR Seals Only

1.5 m (5 ft) 316 ss Flexible Armor	A
3.0 m (10 ft) 316 ss Flexible Armor	B
4.5 m (15 ft) 316 ss Flexible Armor	C
6.0 m (20 ft) 316 ss Flexible Armor	D
7.5 m (25 ft) 316 ss Flexible Armor	E
9.0 m (30 ft) 316 ss Flexible Armor	F
1.5 m (5 ft) 316 ss Flexible Armor, Protective Coat	G
3.0 m (10 ft) 316 ss Flexible Armor, Protective Coat	H
4.5 m (15 ft) 316 ss Flexible Armor, Protective Coat	J
6.0 m (20 ft) 316 ss Flexible Armor, Protective Coat	K
7.5 m (25 ft) 316 ss Flexible Armor, Protective Coat	L
9.0 m (30 ft) 316 ss Flexible Armor, Protective Coat	M

(a) Specify quantity of 2 seals when Seal Orientation Code "A" is specified.
(b) The maximum working pressure with the nonmetallic ptfe and PVC lower housings is 150 psig, regardless of the higher allowable flange pressure ratings.
(c) Select None (0) unless the following stud mounting seal configuration applies:
–Code 2 Diaphragm size with a process connector less than 1 inch.
–Codes 3 and 4 Diaphragm Sizes with a process connector less than 2 inches.
(d) Maximum temperature limit is 204°C (400°F) when transmitters are used with a direct connect PSFAD seal.

PSTAR and PSTAD Series — Threaded Connection, Remote or Direct Mount Pressure Seals with Recessed Diaphragm

PSTAR, Threaded, Remote Mount shown with IDP10 Transmitter

PSTAD, Threaded, Direct Mount shown with IGP10 Transmitter

The PSTAR with Remote Mount, Threaded, Recessed Diaphragm Seals are used with the IDP10, IDP25, IGP10, IGP20, IGP25, IAP10, and IAP20 Differential, Gauge, and Absolute Pressure Transmitters. The PSTAD with Direct Mount, Threaded Seals are used with the IGP10, IGP25, and IAP10 Gauge and Absolute Pressure Transmitters. These transmitter-seal systems are used when a threaded connection to the process is required, along with precise reliable measurements.

How To Order — Specify Complete Transmitter Model Number and Specify: PSTAR or PSTAD

Seal Orientation — Select for PSTAR Seals Only						
Two Seal System, Balanced, Same Seal on both Sides, IDP10 or IDP25 only	-A(a)					
One Seal System, High Side, IDP10, IDP25, IGP20, or IAP20	-B					
One Seal System, Low Side, IDP10 or IDP25 only	-C					
One Seal System, IGP10, IDP25, or IAP10 only	-D					
Diaphragm Size						
2.4 in (Recommended Standard for IGP10, IGP25, and IAP10)		2				
3.0 in (Recommended Standard for IDP10, IGP25, IGP20, and IAP20)		3				
4.0 (for Optimal Temperature Performance) – used with PSTAR only		4				
Process Connector						
¼ in NPT, Internally Threaded			1			
½ in NPT, Internally Threaded			2			
¾ in NPT, Internally Threaded			3			
1 in NPT, Internally Threaded			4			
1½ in NPT, Internally Threaded			5			
Pressure Rating (at 100°F)						
2500 psig when using Carbon Steel Bolts (1250 psig when using 300 Series ss Bolts)[b]				U		
Lower Housing Material (Process Wetted)						
316 ss					S	
Hastelloy C					C	
Tantalum Plate; standard with Tantalum Diaphragm					T	
Titanium Grade 4					E	
Inconel 600					L	
Monel 400					M	
Nickel 200					N	
Diaphragm Material						
316 ss						S
Hastelloy C276						C
Tantalum; Standard with Tantalum Lower Housing						T
Titanium Grade 2 (must Specify Titanium Upper Housing)						E
Inconel 600						L
Monel 400 (must Specify Monel Upper Housing)						M
Nickel 200						N

Upper Housing Material (non-process wetted)

316L ss	S
Monel 400	M
Titanium Grade 4	E

Instrument Connection

PSTAR Only – Capillary-to-transmitter welded; capillary-to-seal ¼ NPT	1
PSTAD Only – ½ NPT	2

Gasket

Organic Fiber with Nitrile; Standard	S
316 ss, Silver Plated	3
ptfe Teflon	T
Buna N	B
Viton	V
Grafoil	G
Hastelloy C, Silver Plated	C

Flushing Connector

None	A
¼ NPT	B
Dual ¼ NPT	C

Bolting

Carbon Steel (for 2500 psig Pressure Rating)	C
300 Series ss (for 1250 psig Pressure Rating)	S

Fill Fluid – Pressure Seal

Fill Fluid	Temperature Limits °C	Temperature Limits °F	
DC200, 10 cSt Silicone	- 40 and +232	- 40 and +450[c]	1
FC77, Fluorinert	- 59 and +82	- 75 and +180	2
DC200, 3 cSt Silicone	- 40 and +149	- 40 and +300	3
DC704, Silicone	- 12 and +304	10 and 580[c]	4

Capillary Internal Diameter – Select for PSTAR Seals Only

0.027 in; Not Available with Fill Fluid Code 4 (DC704 Silicone)	3
0.040 in	4
0.062 in; Not Available with IGP10, IGP25, and IAP10 Transmitters	6

Capillary Length and Type – Select for PSTAR Seals Only

1.5 m (5 ft) 316 ss Flexible Armor	A
3.0 m (10 ft) 316 ss Flexible Armor	B
4.5 m (15 ft) 316 ss Flexible Armor	C
6.0 m (20 ft) 316 ss Flexible Armor	D
7.5 m (25 ft) 316 ss Flexible Armor	E
9.0 m (30 ft) 316 ss Flexible Armor	F
1.5 m (5 ft) 316 ss Flexible Armor, Protective Coat	G
3.0 m (10 ft) 316 ss Flexible Armor, Protective Coat	H
4.5 m (15 ft) 316 ss Flexible Armor, Protective Coat	J
6.0 m (20 ft) 316 ss Flexible Armor, Protective Coat	K
7.5 m (25 ft) 316 ss Flexible Armor, Protective Coat	L
9.0 m (30 ft) 316 ss Flexible Armor, Protective Coat	M

(a) Specify quantity of 2 seals when Seal Orientation Code "A" is specified.

(b) See Pressure-Temperature Limits in Table in PSS for pressure ratings at temperature above 100°F.

(c) Maximum temperature limit is 204°C (400° F) when transmitters are used with a direct connect PSTAD seal.

PSISR and PSISD Series — In-Line Saddle Weld, Remote or Direct Mount Pressure Seals with Recessed Diaphragms

PSISR, Saddle Weld, Remote Mount shown with IGP10 Transmitter

PSISD, Saddle Weld, Direct Mount shown with IGP10 Transmitter

The PSISR with Remote Mount, In–Line Welded, Recessed Diaphragm Seals are used with the IDP10, IDP25, IGP10, IGP20, IGP25, IAP10, and IAP20 Series Differential, Gauge, and Absolute Pressure Transmitters. The PSISD with Direct Mount, In-Line Welded Seals are used with the IGP10, IGP25, and IAP10 Gauge and Absolute Pressure Transmitters. These transmitter-seal systems are used in application that require a continuous process flow across the diaphragm to insure that pressure sensing is not inhibited by buildup of solids.

How To Order — Specify Complete Transmitter Model Number and Specify: PSISR or PSISD

Seal Orientation — PSISR Seals Only; for PSISD Seals, go to Diaphragm Size Selection						
Two Seal System, Balanced, Same Seal on both Sides, IDP10 or IDP25 only	-A(a)					
One Seal System, High Side, IDP10, IDP25, IGP20, or IAP20	-B					
One Seal System, Low Side, IDP10 or IDP25 only	-C					
One Seal System, IGP10, IDP25, or IAP10 only	-D					
Diaphragm Size						
2.4 in.		2				
Process Connector						
In-Line, Saddle Weld to Nominal 3-inch Pipe			3			
In-Line, Saddle Weld to Nominal 4-inch Pipe			4			
Pressure Rating						
Equivalent to a Nominal 3- or 4-inch Schedule 40 Pipe				J		
Lower Housing Material (Process Wetted)						
Carbon Steel					K	
316 ss					S	
Hastelloy C					C	
Titanium Grade 4					E	
Inconel 600					L	
Monel 400					M	
Nickel 200					N	
None (Select for Replacement Seals only)					O	
Diaphragm Material						
316 ss						S
Hastelloy C276						C
Tantalum						T
Titanium Grade 2 (must Specify Titanium Upper Housing)						E
Inconel 600						L
Monel 400 (must Specify Monel Upper Housing)						M
Nickel 200						N

Upper Housing Material (non-process wetted)

316L ss	S
Monel 400	M
Titanium Grade 4	E

Instrument Connection

PSISR Only – Capillary-to-transmitter welded; capillary-to-seal ¼ NPT	1
PSISD Only – ½ NPT	2

Gasket

Organic Fiber with Nitrile (Standard)	S
ptfe (Teflon)	T

Bolting (b)

Carbon Steel (Standard)	C
300 Series ss	S

Fill Fluid – Pressure Seal

Fill Fluid	Temperature Limits ˚C	Temperature Limits ˚F	
DC200, 10 cSt Silicone	-40 and +232	-40 and +450(c)	1
FC77, Fluorinert	-59 and +82	-75 and +180	2
DC200, 3 cSt Silicone	-40 and +149	-40 and +300	3
DC704, Silicone	-12 and +304	10 and 580(c)	4

Capillary Internal Diameter – Select for PSISR Seals Only

0.027 in; Not Available with Fluid Code 4 (DC704)	3
0.040 in	4
0.062 in; Not Available with IGP10, IGP25, and IAP10 Transmitters	6

Capillary Length and Type – Select for PSISR Seals Only

1.5 m (5 ft) 316 ss Flexible Armor	A
3.0 m (10 ft) 316 ss Flexible Armor	B
4.5 m (15 ft) 316 ss Flexible Armor	C
6.0 m (20 ft) 316 ss Flexible Armor	D
7.5 m (25 ft) 316 ss Flexible Armor	E
9.0 m (30 ft) 316 ss Flexible Armor	F
1.5 m (5 ft) 316 ss Flexible Armor, Protective Coat	G
3.0 m (10 ft) 316 ss Flexible Armor, Protective Coat	H
4.5 m (15 ft) 316 ss Flexible Armor, Protective Coat	J
6.0 m (20 ft) 316 ss Flexible Armor, Protective Coat	K
7.5 m (25 ft) 316 ss Flexible Armor, Protective Coat	L
9.0 m (30 ft) 316 ss Flexible Armor, Protective Coat	M

(a) Specify quantity of 2 seals when Seal Orientation Code "A" is specified.
(b) The PSISR and PSISD use a standard eight-bolt pattern. If a custom six-bolt pattern is required, contact Foxboro.
(c) The maximum temperature is 204˚C (400˚F) when transmitters are used with a direct connect PSISD seal.

PSSCR and PSSCT Series – Sanitary, Tri-Clamp, Remote or Direct Mount Pressure Seals with Flush Diaphragm

PSSCR, Sanitary, Remote Mount shown with IGP10 Transmitter

PSSCT, Sanitary, Direct Mount shown with IDP10 Transmitter

The PSSCR Sanitary Series with Remote Mount, Flush Diaphragm Seals are used with the IDP10, IDP25, IGP20, IGP25, IAP20, IGP10, and IAP10 Series Differential, Gauge, and Absolute Pressure Transmitters. The PSSCT Direct Mount seals are used with the IGP20, IDP10, or IDP25 Gauge and Differential Pressure Transmitters. These sanitary seals meet 3-A Sanitary Standards. They attach to the process connection and are secured with a user-supplied Tri-Clover Tri-Clamp.

Process Pressure-Temperature Limits
The maximum working pressure of the seal process connection varies with the sanitary clamping device provided by the user. Refer to Tri-Clover Tri-Clamp standards to determine the pressure-temperature limits of the clamping system that you are using. Do not exceed the Tri-Clover Tri-Clamp limits, nor the temperature limits of the seal and capillary fill fluid selected.

How To Order – Specify Complete Transmitter Model Number and Specify: PSSCR or PSSCT

Seal Orientation
Two Seal System, Balanced – Same Seal on both Sides, IDP10 or IDP25 only ..... -A(a)
One Seal System, High Side, IDP10, IDP25, IGP20, or IAP20 (specify -B for PSSCT) ..... -B
One Seal System, Low Side, IDP10 or IDP25 only ..... -C
One Seal System, IGP10, IGP25, or IAP10 only ..... -D

Diaphragm Size
2 inch Tri Clamp 2
3 inch Tri Clamp 3
4 inch Tri Clamp (not for PSSCT) 4

Process Connector (do not specify for PSSCT – Tri Clamp is standard)
Tri-Clover Tri Clamp 1

Diaphragm Material (do not specify for PSSCT – 316L ss is standard)
316L ss ..... S
Hastelloy C276 C

Instrument Connection 1
PSSCR: capillary welded at both transmitter and seal
PSSCT: Bolted, Gasketed

Fill Fluid – Pressure Seal and Capillary

Fill Fluid	Temperature Limits °C	°F	
Neobee M20	-18 and +204	0 and +400	5

Capillary Internal Diameter (do not specify for PSSCT)
0.027 in 3
0.040 in 4
0.062 in 6

Capillary Length and Type (do not specify for PSSCT)

1.5 m (5 ft) 316 ss Flexible Armor, Protective Coat	G
3.0 m (10 ft) 316 ss Flexible Armor, Protective Coat	H
4.5 m (15 ft) 316 ss Flexible Armor, Protective Coat	J
6.0 m (20 ft) 316 ss Flexible Armor, Protective Coat	K
7.5 m (25 ft) 316 ss Flexible Armor, Protective Coat	L
9.0 m (30 ft) 316 ss Flexible Armor, Protective Coat	M

(a) When Seal Orientation Code A is specified, then indicate that two identically model numbered seals are required.

PSSSR and PSSST Series – Sanitary, Tri-Clamp, Remote or Direct Mount Pressure Seals with Extended Diaphragm

PSSSR, Sanitary, Tri-Clamp/Spud shown with IGP10 Transmitter

PSSST, Sanitary, Tri-Clamp/Spud shown with IDP10 Transmitter

The PSSSR Sanitary Series with Remote Mount, Extended Diaphragm Seals are used with the IDP10, IDP25, IGP20, IGP25, IAP20, IGP10, and IAP10 Series Differential, Gauge, and Absolute Pressure Transmitters. The PSSST Direct Mount Seals are used with the IGP20, IDP10, or IDP25 Gauge and Differential Pressure Transmitters. These Sanitary Seals meet 3-A Sanitary Standards. They attach a welded spud connection and are secured with a Tri-Clover Tri-Clamp, supplied with the transmitter.

How to Order – Specify Complete Transmitter Model Number and Specify: PSSSR and PSSST

Seal Orientation

Identical seal for both sides of IDP10 or IDP25	-A
Seal is for the high side of IDP10, IDP25, IGP20 or IAP20 (Specify B for PSSST)	-B
Seal is for the low side of IDP10 or IDP25	-C
Seal is for an IGP10, IGP25 or IAP10	-D

Structure Code – Seal/Tank Spud Size, Diaphragm Material, and Extension Length

Seal/Tank Spud Size	Diaphragm Material	Extension Length	
2 in/Mini-Spud	316L ss	1½ inch	2S2
2 in/Mini-Spud	316L ss	6 inches	2S6
2 in/Mini-Spud	316L ss	9 inches	2S9
4 in/Standard Spud	316L ss	2 inches	4S2
4 in/Standard Spud	316L ss	6 inches	4S6

Instrument Connection

PSSSR Only – Capillary welded both transmitter and seal	3
PSSST Only – Bolted, Gasketed	5

Fill Fluid – Pressure Seal, and Capillary as applicable

Neobee M20, -18 and +204°C (0 and +400°F) Temperature Limits	5

Capillary Internal Diameter – Select with PSSSR Seals Only

0.040 in I.D.	4

Capillary Length and Type – Select with PSSSR Seals Only

1.5 m (5 ft) 316 ss Flexible Armor, Protective Coat	G
3.0 m (10 ft) 316 ss Flexible Armor, Protective Coat	H
4.5 m (15 ft) 316 ss Flexible Armor, Protective Coat	J
6.0 m (20 ft) 316 ss Flexible Armor, Protective Coat	K
7.5 m (25 ft) 316 ss Flexible Armor, Protective Coat	L
9.0 m (30 ft) 316 ss Flexible Armor, Protective Coat	M

Accessories – Tank Weld Spuds

Part No.	Description	For Use with Structure Code
N1212AU	Standard Spud – 2 inch extension	4S2
N1212AV	Standard Spud – 6 inch extension	4S6
N1212GG	Mini Spud – 1.5 inch extension	2S2
N1214BP	Mini Spud – 6 inch extension	2S6
N1214BQ	Mini Spud – 9 inch extension	2S9

Structure Codes TA-TB, T2-T5, M1-M9 & PX-PZ – Sanitary Process Connections for IGP10, IGP25, and IAP10 Gauge and Absolute Pressure Transmitters

Types PX-PZ

Types M1-M9

Types TA-TB and T2-T5

- Process Connectors
  - *Selection of Tri-Clamp, mini-tank spuds, or flush-threaded spud types.*
- Process Wetted Parts
  - *316L ss or Hastelloy C Diaphragm*
  - *316L ss Connection*
- Process O-Ring (Tri-Clamp and Mini Tank Spud Versions)
  - *EPDM*
- Process Gasket (Threaded Type)
  - *Gylon® (filled ptfe)*
- Fill Fluid
  - *Neobee M-20*

Integral Sanitary Process Connectors

All welding, intergral, 316L stainless steel process connector with Tri-Clamp™ flush or extended diaphragms or threaded, extended diaphragm versions. Flush Tri-clamp connections offered in 1½, 2, and 3 inch sizes with either a 316L ss or Mastelloy C diaphragm; mini tank spud connections are offered with a 1½, 6, or 9 inch extension with a 316L ss diaphragm; and flush-threaded spud type connections are offered in 1 and 1½ inch sizes.

For complete specifications, refer to Product Specification Sheet PSS 2A-1C13K.

How to Order – Specify Model Code of IAP10, IGP10, or IGP25 Transmitter with one of the following Structure Codes:

Structure Code – Materials, Fill Fluid, and Process Connector Type

Connection Material	Diaphragm Material	Fill Fluid	Process Connect Type	
316L ss	316L ss	NEOBEE M-20	1.5-in Tri-Clamp, Sanitary	TA
316L ss	316L ss	NEOBEE M-20	2.0-in Tri-Clamp, Sanitary	T2
316L ss	316L ss	NEOBEE M-20	3.0-in Tri-Clamp, Sanitary	T3
316L ss	Hastelloy C276	NEOBEE M-20	1.5-in Tri-Clamp, Sanitary	TB
316L ss	Hastelloy C276	NEOBEE M-20	2.0-in Tri-Clamp, Sanitary	T4
316L ss	Hastelloy C276	NEOBEE M-20	3.0-in Tri-Clamp, Sanitary	T5
316L ss	316L ss	NEOBEE M-20	Mini Tank Spud Seal, 1½ in extension	M1
316L ss	316L ss	NEOBEE M-20	Mini Tank Spud Seal, 6-in extension	M6
316L ss	316L ss	NEOBEE M-20	Mini Tank Spud Seal, 9-in extension	M9
316L ss	316L ss	NEOBEE M-20	1-in Flush-Threaded Spud Type	PX
316L ss	316L ss	NEOBEE M-20	1.5-in Flush-Threaded Spud Type	PZ

For Tank Spuds and other accessories, refer to page 1-67.

Structure Codes PA-PJ – Pulp and Paper Process Connections for IGP10, IGP25, and IAP10 Gauge and Absolute Pressure Transmitters

- Process Wetted Parts
  - *316L ss or Hastelloy C Diaphragm*
  - *316L ss Connection*
- Process O-Ring (Sleeve Type)
  - *Viton®*
- Process Gasket (Threaded Type)
  - *Gylon® (filled ptfe)*
- Process Connectors
  - *Threaded or sleeve mounting*

Integral Process Connectors for Pulp and Paper Processors

All welded, integral, 316L stainless steel connector with sleeve or threaded type end connections.

Sleeve and threaded type connectors are offered in 1 and 1½ inch sizes with either a 316L ss or Hastelloy C276 diaphragm. A 1½ inch threaded type with a Hastelloy C276 diaphragm is also offered to fit an Ametek Spud.

For complete specifications, refer to Product Specification Sheet PSS 2A-1C13L.

How to Order – Specify Model Code of IAP10, IGP10, or IGP25 Transmitter with one of the following Structure Codes:

Structure Code – Materials, Fill Fluid, and Process Connection Type

Connection Material	Diaphragm Material	Fill Fluid	Process Connection Type	
316L ss	316L ss	Silicone	Sleeve Type, 1 inch nominal	PA
316L ss	316L ss	Silicone	Threaded Type, 1 inch nominal	PB
316L ss	316L ss	Silicone	Sleeve Type, 1½ inch nominal	PC
316L ss	316L ss	Silicone	Threaded Type, 1½ inch nominal	PD
316L ss	Hastelloy C276	Silicone	Sleeve Type, 1 inch nominal	PE
316L ss	Hastelloy C276	Silicone	Threaded Type, 1 inch nominal	PF
316L ss	Hastelloy C276	Silicone	Sleeve Type, 1½ inch nominal	PG
316L ss	Hastelloy C276	Silicone	Threaded Type, 1 inch nominal	PH
316L ss	Hastelloy C276	Silicone	Threaded Type, 1 inch nominal (fits Ametek spud)	PJ

For Tank Spuds and other accessories, refer to page 1-67.

Tank Spuds and Accessories – for Transmitters with Sanitary and Pulp and Paper Industry Connections

Weld Spuds, Heat Sink/Plugs, Calibration Adapters, and O-Rings/Gaskets[a]

Sanitary Transmitters

Description	Used with Structure Code	Part Number[b]
For use with Mini Tank Spud Connector		
Weld Spud, 1.5 inch Extension	M1	N1212GG
Weld Spud, 6 inch Extension	M6	N1214BP
Weld Spud, 9 inch Extension	M9	N1214BQ
Package of 5 spare O-rings	M1, M6, M9	N1212LB[d]
For use with 1 inch Flush, Threaded Connector		
Weld Spud[c]	PX	N1214XW
Heat Sink/Plug[c]	PX	N1214YS
Calibration Adapter	PX	N1214XX
Process Gasket (Gylon)[c]	PX	N1214YX[d]
For use with 1.5 inch Flush, Threaded Connector		
Weld Spud[c]	PZ	N1214LG
Heat Sink/Plug[c]	PZ	N1214YR
Calibration Adapter	PZ	N1214MN
Process Gasket (Gylon)	PZ	N1214YV[d]

Pulp & Paper Transmitters

Description of Accessory	Use with Structure Code	Part Number[b]
For use with 1 inch sleeve type connector		
Weld spud	PA, PE	N1214LH
Calibration adapter	PA, PE	N1214MP
Process O-Ring at diaphragm (Viton), 1-in sleeve	PA, PE	N1214YY[d]
Process O-Ring, outer (viton), 1-in sleeve	PA, PE	N1214YZ[d]
For use with 1 inch flush, threaded type connector		
Weld spud	PB, PF	N1214XW
Heat sink/plug[c]	PB, PF	N1214YS
Calibration adapter	PB, PF	N1214XX
Process gasket (Gylon)	PB, PF	N1214YX[d]
For use with 1.5 inch sleeve type connector		
Weld spud	PC, PG	N1214MM
Calibration adapter	PC, PG	N1214MQ
Process O-Ring (Viton)	PC, PG	N1214YW[d]
For use with 1.5 inch flush, threaded type connector		
Weld spud (c)	PD, PH	N1214LG
Heat sink/plug[c]	PD, PH	N1214YR
Calibration adapter	PD, PH	N1214MN
Process gasket (Gylon)	PD, PH	N1214YV[d]
For use with 1.5 inch threaded type connector for Ametek spud		
Weld spud[c]	PJ	N1214AM
Heat sink/plug[c]	PJ	N1214AP
Calibration adapter	PJ	N1214AN
Process gasket (Gylon)	PJ	N1214AQ[d]

(a) Accessories are ordered and supplied separately. Also, refer to pages 1-64 for tank spuds for PSSSR and PSSST Sanitary Seals.
(b) Refer to PSS Dimensions-Nominal section for configuration and dimensions of accessories listed.
(c) When ordering a weld spud with a threaded type connector, note that use of a heat sink/plug is required to prevent metal distortion due to the high temperature of the welding process.
(d) Each transmitter is shipping with its required gaskets or O-rings. Part number listed is for a package of five O-rings or gaskets. This package of gaskets/O-Rings is recommended as extras or spares.

The following chapters contain Product Specifications of the Instruments:

CO Compact Orifice Assemblies for use with DP Transmitters

IFOA Integral Flow Orifice Assemblies for use with DP Transmitters

Note: Refer to Section 3 for In-Line Flow Meters (Coriolis, Vortex, and Mag Flow) and related instruments.

Model CO Compact Orifice Complete with Foxboro® Differential Pressure Transmitters

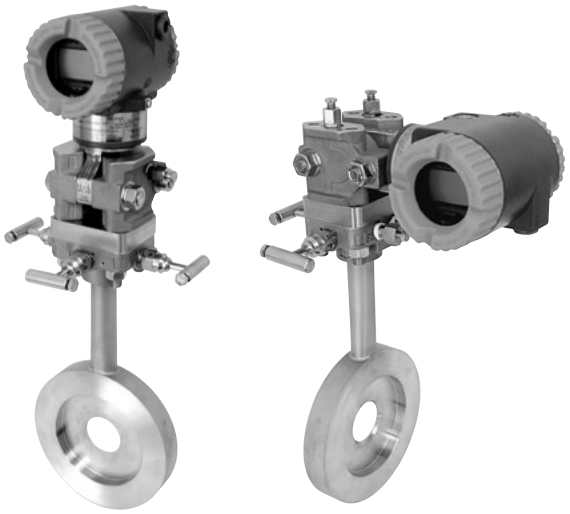

The Model CO Compact Orifice is a wafer body orifice plate that includes an integral three-valve manifold. This one-piece unit mounts directly to an I/A Series® differential pressure transmitter. An alignment ring and an optional installation kit provide the hardware necessary to properly install the orifice in various pipeline sizes having ANSI® or DIN flanges. For complete specifications, refer to Product Specification Sheet PSS 3-5A1E.

- Direct mounting of the Model CO Compact Orifice to d/p Cell® transmitter, as compared to separate and remote manifold and transmitter installations, provides improved and more consistent performance and a greatly simplified and economical installation procedure.
- The Compact Orifice and the calibrated transmitter are factory assembled to form a functioning unit, and shipped ready for installation in a pipeline.
- Suitable for use in liquid, gas, or steam services.
- A 316 ss, 25 mm (1 in) thick wafer body, with a concentric orifices.
- Optimal beta ratios of 0.40 or 0.65 available.
- Rugged, integral construction (orifice plate and manifold) eliminates tubings, fittings, and orifices-to-manifold leakage points.
- Offered for use in pipeline sizes ranging from DN 15 to DN 100, or ½ to 4 inches, having ANSI or DIN flanges.
- A standard alignment ring, for use with the pipeline size and ANSI or DIN flange selected, is provided with each Model CO to easily and accurately center the orifice within the pipeline.
- Pipeline installation kits (with studs, nuts, and gaskets), consistent with pipeline size flange type, are optionally available.

Standard Specifications

Orifice Type: Concentric, square edge, corner tap

Process Fluids: Liquid, gas, and steam

Process Temperature Limits: -40 to +232°C (-40 to +450°F)

Maximum Working Pressure: Per ANSI Class 600 or DIN PN 100 flanges

Flow (Discharge) Coefficient Uncertainty:
15 TO 40 mm (½ TO 1½ in) LINE SIZES
1.75% Uncertainty
50 TO 100 mm (2 TO 4 in) LINE SIZES
1.25% Uncertainty

Pipeline Sizes:
DN 15, DN 25, DN 50, DN 80, or DN 100;
1/2, 1, 1 1/5, 2, 3, or 4 in

Beta Ratio[(b)]*:* 0.40 or 0.65

Process Connections: Mounts between ANSI Class 150, 300, or 600 flanges, or DIN PN 16, PN 40, or PN 100 flanges.

Assembly to Transmitter: Delivered assembled to a calibrated Foxboro® IDP10, IDP25 or IDP50 d/p Cell Transmitter, or an IMV25 or IMV 30 Multivariable Transmitter.

Body and Gasket Materials — Process Wetted:
Compact Orifice: 316 ss with ptfe gasket
Optional Flange Gaskets: Durlon 8500 Aramid/Inorganic Fiber with NBR rubber binder

Stud and Nut Material — Not Process Wetted:
Compact Orifice-to-Transmitter:
316 ss Studs, A193 Gr. B8M
316 ss Nuts, A194 Gr. 8M
Optional Flange Bolting: Plated Carbon Steel Studs and Nuts

Alignment Rings and Hardware Kit Provided for Proper Installation

Centering of the compact orifice within the pipeline is necessary to reduce flow errors and improve overall measurement performance. Therefore, to ensure proper installation, an alignment ring is provided that is consistent with the pipeline size and whether ANSI or DIN flanges are used. For users who require flange bolting hardware for use with the alignment ring, an optional installation kit (studs, nuts, and gaskets) can be provided consistent with pipeline size and flange type ANSI or DIN selected.

Used with Foxboro® Transmitters

The compact orifice is used with the following I/A Series d/p Cell transmitters listed below.

Model	Description	Protocol	PSS No.
IDP10	DP	FoxCom™	2A-1C14 A
IDP10	DP	HART®	2A-1C14 B
IDP10	DP	Fieldbus[b]	2A-1C13 E
IDP10	DP	Analog[c]	2A-1C14 C
IDP10	DP	Analog[d]	2A-1C13 D
IDP25	Multirange (DP)	FoxCom, HART, and Fieldbus	2A-1C14 K
IDP50	Premium Performance (DP)	FoxCom, HART, and Fieldbus	2A-1C14 L
IMV25	Multivariable (DP, AP, and T)	FoxCom, HART	2A-1C15 B
IMV30	Multivariable (DP, AP, and T)	FoxCom and HART	2A-1C15 A

a) DP = Diff. Pressure; AP = Absolute Pressure; T = Temperature.
b) Fieldbus = FOUNDATION® Fieldbus.
c) Analog = 4 to 20 mA dc analog output.
d) Analog = 1 to 5 V dc (Low Power)

How to Order –Specify th complete model number of the Transmitter, plus the following Auxiliary Specification (AS) Code. Installation Kit is optional. (Compact Orifice and Transmitter are shipped as an assembly.)

Auxiliary Specification (AS) Code – Compact Orifice

Description (a)	AS Code
Compact Orifice with Integral 3-Valve Manifold	CO
Pipeline Size	
DN 15 or ½ inch Pipe	-HH
DN 25 or 1 inch Pipe	-11
DN 40 or 1½ inch Pipe	-1H
DN 50 or 2 inch Pipe	-22
DN 80 or 3 inch Pipe	-33
DN 100 or 4 inch Pipe	-44
Beta Ratio	
0.40	4
0.65	6
Alignment Ring	
For use with ANSI Flanges	A
For use with DIN Flanges	D
Example: AS Code CO-224A	

a) Refer to AS Code CI if an optional installation kit is needed to assemble the orifice to the pipeline.

Auxiliary Specification (AS) Code – Optional Installation Kit

Description (a)	AS Code
Installation Kit for Compact Orifice (a)	CI
Pipeline Size	
DN 15 or ½ inch Pipe	-HH
DN 25 or 1 inch Pipe	-11
DN 40 or 1½ inch Pipe	-1H
DN 50 or 2 inch Pipe	-22
DN 80 or 3 inch Pipe	-33
DN 100 or 4 inch Pipe	-44
Flange Rating	
ANSI Class 150 Flange	AN150
ANSI Class 300 Flange	
AN300	
ANSI Class 600 Flange	AO600
DIN PN 16	PN016
DIN PN 40	PN040
DIN PN 100	PN100
Example: AS Code CI-22AN150	

a) The optional installation kit includes the bolts, nuts, and gaskets required to assemble the Model CO to the pipeline.

IFOA Series Integral Flow Orifice Assemblies

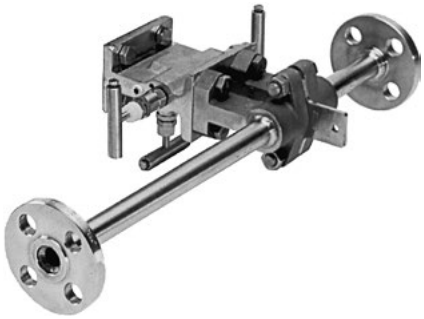

The IFOA Series Integral Flow Orifice Assemblies adapt electronic and/or pneumatic d/p Cell Transmitters for measuring small flow rates.

For complete specifications, refer to Product Specification Sheet PSS 3-5A1 B.

- The IFOA has very high accuracy when equipped with associated piping
- The IFOA can be used with any differential pressure transmitter having standard process connections
- Process wetted materials are available for use with both corrosive and noncorrosive fluids
- The transmitter can be either integrally coupled or remotely connected
- Process wetted material meets NACE Standard MR-01-75

Specifications

Assemblies with Associated Piping:

Body Material: Cast AISI Type 316 ss ASTM A351 Grade CF-8M stainless steel.
Piping Material: Seamless stainless alloy steel pipe to ASTM A-312 Grade TP-316, Schedule 40 for the 15 and 25 mm (½ and 1 in) sizes, Schedule 80 for the 40 mm (1½ in) size.
Flange Material: Forged 316 ss ASTM A182 F316.

Assemblies without Associated Piping:

Body Material: Cast AISI Type 316 ss ASTM A351 Grade CF-8M stainless steel or cast Hastelloy C Grade CW-2M per ASTM A494/A494M-86, as specified.

Body Bolting: ASTM A193 Grade B7 cadmium- or zinc-plated with yellow chromate finish alloy steel stud bolts and ASTM A194 Grade 2H nuts. Orifice Plate Material: 316 ss ASTM A240, Monel ASTM B127, or Hastelloy C276 ASTM B626, as specified.

Orifice Sealing Gasket Material: Glass-reinforced ptfe.

Assemblies with or without Associated Piping
Static Pressure Rating and Process Temperature Limits:

End Connection	Assembly Size		Static Pressure Rating and Process Temperature Limits[1]	
	mm	in	SI Units	US Units
Weld Ends	15	½	20 MPa from -40 to +40°C 16 MPa at 150°C	3000 psi from -40 to +100°F 2300 psi at 300°F
	25	1	14 MPa from -40 to +40°C 10.5 MPa at 150°C	2000 psi from -40 to +100°F 1550 psi at 300°F
	40	1.5	5 MPa from -40 to +40°C 4 MPa at 150°C	750 psi from -40 to +100°F 580 psi at 300°F
Threaded Ends	15, 25	½, 1	10 MPa from -40 to +150°C	1500 psi from -40 to +300°F
	40	1.5	5 MPa from -40 to +40°C	750 psi from -40 to +100°F
	40	1.5	4 MPa at 150°C	580 psi at 300°F
Flanged Ends[2]	All sizes	Static Pressure Rating of Flange Selected		

Notes

1 Process temperature limits are -40 and +150°C (-40 and +300°F). Transmitter temperature limitations must be observed when integrally mounted to IFOA assembly. For higher pressures and temperatures, refer to Foxboro.
2 Available with associated piping only

Optional Features

- ✔ Process wetted materials in compliance with NACE Standard MR-01-75.
- ✔ High pressure assembly (IFO). Static pressure rating 40 MPa (6000 psi).
- ✔ 17-4 ss body bolting.
- ✔ Oxygen service preparation.
- ✔ 3-valve manifolds.
- ✔ 180° U-Bend Integral Orifice Attachment.
- ✔ Orifice Kits
  - 316 ss–Consisting of 7 bored diameters per standard specifications for 15 mm (½ in) assembly
  - 316 ss–Consisting of 5 bored diameters per standard specifications for 25 mm (1 in) assembly.
  - 316 ss–Consisting of 5 bored diameters per standard specifications for 40 mm (1½ in) assembly
  - Monel–Consisting of 7 bored diameters per standard specifications for 15 mm (½ in) assembly

How to Order – Specify model number IFOA followed by order code for each selection (Transmitter may be specified and ordered separately).

Nominal Size							
15 mm (½ in)	0H						
25 mm (1 in)	01						
40 mm (1½ in)	1H						
Body Material							
316 ss		S					
Hastelloy C, Grade CW-2M (without associated piping only)		H					
End Connection without Associated Piping							
Socket Weld Body			1				
Threaded Body (NPT)			2				
Threaded Body (R metric)			8				
End Connection with Associated Piping							
Pipe Ends Prepared for Welding				3			
Pipe Ends Threaded (NPT)				4			
Pipe Ends Threaded (R metric)				9			
Pipe Ends Flanged ANSI Class 150				5			
Pipe Ends Flanged ANSI Class 300				6			
Pipe Ends Flanged ANSI Class 600, 15 and 25 mm (½ and 1 in) only				7			
Orifice Plate Material							
316 ss					S		
Monel					M		
Hastelloy C276					H		
Orifice Bore Diameter							
Nominal Size 15 mm (1/2 in)							
0.508 mm (0.020 in)						A	
0.889 mm (0.035 in)						B	
1.524 mm (0.060 in)						C	
2.540 mm (0.100 in)						D	
4.064 mm (0.160 in)						E	
6.350 mm (0.250 in)						F	
8.890 mm (0.350 in)						G	
Jewel orifice. 316 ss base material. 0.0508 to 0.381 mm (0.002 to 0.015 in)						U	
Nonstandard within beta limits of 0.1 to 0.8						V	
Nominal Size 25 mm (1 in)							
6.147 mm (0.242 in)							H
8.661 mm (0.341 in)							J
12.14 mm (0.478 in)							K
16.64 mm (0.655 in)							L
21.13 mm (0.832 in)							M
Nonstandard within beta limits of 0.1 to 0.8							V

Nominal Size 40 mm (1½ in)

9.703 mm (0.382 in)	N
13.67 mm (0.538 in)	P
19.08 mm (0.751 in)	R
25.86 mm (1.018 in)	S
29.97 mm (1.180 in)	T
Nonstandard within beta limits of 0.1 to 0.8	V

Optional Connectors (For remote mounting d/p Cell Transmitter)

316ss, ½ NPT	S
316 ss, R ½	S
Hastelloy C, ½ NPT	1H
Hastelloy C, R ½	2H

Specify orifice bore diameter or supply completed flow data sheets (refer to Foxboro) for nonstandard or jewel orifices

Specify Optional Features

Specify information for instrument tag

The following chapters contain Product Specifications of the Instruments:

84	Series Vortex Flowmeters
CFS10	Mass Flowtubes
CFS10	Sanitary Mass Flowtubes
CFS20	Mass Flowtubes
CFS20	Sanitary Mass Flowtubes
CFT51	Mass Flow Transmitters

High Power, Expulse, Magnetic Flowmeters:

2800	Series PTFE Lined Flowtubes
IMT96	Series Transmitters

Pulse DC Magnetic FlowMeters:

8000A	Series Wafer Body
9100A, 9200A, 9300A	Series Flanged Body Flowtubes
IMT25	Intelligent Magnetic Flow Transmitters
MAG2IC, MAG2RT, MAG2RS	Intelligent Magnetic Flow Transmitters and Flowtube

Sanitary Magnetic Flowmeters

4700S, 47/48	Sanitary Magnetic Flowmeter: Model 4700S Ceramic or PFA lined Sanitary Flowtube and Models 47 and 48 Transmitters
75RTA, 75LBA, 75MCA	Series FlowExpert Computing Totalizer/Batcher
IMTSIM	Magnetic Flow Simulator
IFOA Integral Flow Orifice Assemblies	Refer to Section 1

Note: Refer to Sections 1 and 2 for DP and Multivariable Transmitters and Primary Elements used for Flow Rate Measurement.

Visit FlowExpertPro.com for all of your sizing requirements.

84 Series Vortex Flowmeters

The 84 Series Vortex Flowmeters measure flow by monitoring the action of vortices formed in the fluid by a patented shedder bar. Lifetime Warranty on the sensor, and Two Year Warranty on all other components.

Refer to Product Specifications sheet PSS 1-8A3A for intelligent digital/analog, wafer and flanged: PSS 1-8A5A for sanitary and PSS 1-8A6A for Low Power version.

- Measures Liquid, Gas, or Steam
- Wide Rangeability
- Pulse, Analog, and Digital Outputs
- Automatic compensation for low Reynold's number and piping configurations
- HART
- Easy Installation
- High Accuracy
- No Moving Parts
- Patented Extended Temperature Range Sensor
- Superior Resistance to Vibration and External Influences
- Integral Flow Totalization
- Versions Include Sanitary, NACE, and Remote Electronics

Functional Specifications

Flow Measurement Ranges: Meter size is determined from flow velocity calculations. Refer to Foxboro's FlowExpert Sizing Program

Process Temperature Limits: -20 and +430°C (0-800°F); depending on sensor selection (see How to Order)

Ambient Temperature Limits: -40 and +80°C (-140 and +176°F)

Operating Pressure:
84W Series:Equivalent rating of mating flanges or piping per ANSI B16.5 with a maximum limit of 10 MPa (1500 psi) at 24°C (75°F)
84F Series: Up to pressure rating of meter flanges

Electrical Classification: FM and CSA certified. Explosion-proof and intrinsically safe versions available. Refer to Foxboro for complete specifications.

Low Power Version: For use in battery and solar powered applications. Intelligent electronics, Low Power, HART Protocol, with and without pulse output.

Foxboro Certificates of Compliance/Conformance

Standard Certificate of Compliance and Material Certification of Process Wetted Metal (conforms to BS EN 10204 3.1).

Performance Specifications

Accuracy: Installation parameters such as pipe bore, location of valves and proximity to elbows, etc., will affect the accuracy of the flow measurement. The I/A Series Vortex Flowmeter can be configured to compensate for these effects and correct the measurement

For Liquids: Accuracy within the calibrated Reynolds Number range is ±0.5 of reading. Outside the calibrated range the accuracy is ±1.0% of reading for flow rates with Reynolds Number of 20,000 or greater. ±2.0% for Reynolds numbers between 5000 and 20,000

For Gases and Steam: Accuracy is ±1% of reading for flow rates with Reynolds Number of 20,000 or greater. Type D and Type T electronics ±2.0% for Reynolds numbers between 5000 and 20,000

Physical Specifications

Material: See How to Order

Mounting: 84W: Wafer style, mounts between ANSI Class 150, 300, or 600, or metric PN16, 40, 63, or 100 flanges. 84F: Flanged type. See How to Order for flanges available. (Consult Foxboro for 900CL and 1500 CL)

Enclosure Classification: Meets IEC IP66 and provides the watertight protection of NEMA Type 4X

Electrical Connections: Tapped for either M 20 or 1/2" NPT Conduit

Optional Features

- ✔ *Isolation Manifold Valve:* Bonnet mounted, ported ball valve. Allows sensor to be removed without interrupting the flow in the pipeline
- ✔ *NACE:* Meets NACE Standard MR-01, stainless steel material only
- ✔ *Oxygen Service:* Cleaned and packaged for oxygen service with Fluorolube filled sensor diaphragm only. Maximum temperature 95°C (200°F)
- ✔ *Gold Plated Sensor*

How to Order 84F: Flanged Version–Specify model number 84F followed by order code for each selection

Electronics Version

Intelligent Electronics, HART Communication Protocol, with Pulse Output	-T
Intelligent Electronics, HART Communication Protocol, without Pulse Output	-U
Intelligent Electronics, Low Power, HART Communication Protocol, with Pulse Output[h]	-L
Intelligent Electronics, Low Power, HART Communication Protocol, without Pulse Output[h]	-M

Nominal Line Size

3/4 in (DN 15) Line Size	3Q
1 in (DN 25) Line Size	01
1 1/2 in (DN 40) Line Size	1H
2 in (DN 50) Line Size	02
3 in (DN 80) Line Size	03
4 in (DN 100) Line Size	04
6 in (DN 150) Line Size[e]	06
8 in (DN 200) Line Size[e][l]	08
10 in (DN 250) Line Size[e]	10
12 in (DN 300) Line Size[e]	12

Body, Flange, and Shedder Bar Material

CF8M 316 SS Cast Body/Shedder and Type 316 SS Flanges (Line Sizes 3Q to 04) and Type 304 SS Flanges (Line Sizes 06 to 12)	R
CF8M 316SS Cast Body/Shedder and Type 316 SS Flanges (Line Sizes 3Q to 04) and Type 304 SS Flanges (Line Sizes 06 to 12) (Face-to-face lengths are backward compatible with Style A Model 84 Vortex Flowmeters)[i][j]	Y
CF8M 316 SS Cast Body/Shedder and A105 Carbon Steel Flanges	J
Duplex SS Cast Body/Shedder per ASTM A 995, Grade 4A, CD3MN and Duplex SS Flanges per A182 Grade F51[e]	D
CX2MW Cast Nickel Alloy (equivalent to Hastelloy® C-22) Body/Shedder and Nickel Alloy N06022 Flanges[e]	H

End Connections and Flange Rating

ANSI Class 150 RF	1
ANSI Class 300 RF	2
ANSI Class 600 RF	3
ANSI Class 900 RF (Not Available with Line Sizes 10 and 12)	4
ANSI Class 1500 RF (Not Available with Line Sizes 10 and 12)	9
ANSI Class 150 RTJ (Not Available with Line Size 3Q)	N
ANSI Class 300 RTJ	P
ANSI Class 600 RTJ	R
ANSI Class 900 RTJ (Not Available with Line Sizes 10 and 12)	S
ANSI Class 1500 RTJ (Not Available with Line Sizes 10 and 12)	T
PN16 EN1092-1 Raised Face Type "D" Nut Groove (Available with Line Sizes 06 through 12 only)	5
PN25 EN1092-1 Raised Face Type "D" Nut Groove (Available with Line Sizes 08 through 12 only)	J
PN40 EN1092-1 Raised Face Type "D" Nut Groove	6
PN63 EN1092-1 Raised Face Type "D" Nut Groove[g]	7
PN100 EN1092-1 Raised Face Type "D" Nut Groove	8
PN160 EN1092-1 Raised Face Type "D" Nut Groove (Not Available with Line Sizes 3Q, 10, and 12)	K
PN16 EN1092-1 Raised Face Finish Type B1 (Available with Line Sizes 06 through 12 only)	D
PN25 EN1092-1 Raised Face Finish Type B1 (Available with Line Sizes 08 through 12 only)	L
PN40 EN1092-1 Raised Face Finish Type B1	F
PN63 EN1092-1 Raised Face Finish Type B2[c]	G
PN100 EN1092-1 Raised Face Finish Type B2	H
PN160 EN1092-1 Raised Face Finish Type B2 (Not Available with Line Sizes 3Q, 10, and 12)	M

Single or Dual Measurement; Isolation Valve and Manifold

Single Measurement; No Isolation Valve	S
Dual Measurement; Manifold with no Isolation Valves	D
Single Measurement; Manifold with 1 Isolation Valve; CF8M (316 SS); Not Available with End Connections 4, 9, H, K, M, S, and T[e]	K
Dual Measurement; Manifold with 2 Isolation Valves; CF8M (316 SS); Not Available with End Connections 4, 9, H, K, M, S, and T[e]	L

Sensor Fill, Temperature Range, and Material

Standard Temperature Range (with Fill Fluid)

Fluorolube Fill, 0 to 200°F (-20 to +90°C) Nickel alloy CW2M (equivalent to Hastelloy C-4C[k]	D
Fluorolube Fill, 0 to 200°F (-20 to +90°C) Stainless Steel Type CF3M	F
Silicone Fill, 0 to 400°F (-20 to +200°C) Nickel alloy CW2M (equivalent to Hastelloy C-4C[k]	R
Silicone Fill, 0 to 400°F (-20 to +200°C) Stainless Stainless Steel Type CF3M	S

Extended Temperature Range (No Fill Fluid)[d][f]

Unfilled, 400° to 700°F (200° to 370°C) Nickel alloy CW2M (equivalent to Hastelloy ® C-4C (k)	A
Unfilled, 400° to 700°F (200° to 370°C) Stainless Steel Type CF3M	B
Unfilled, 400° to 800°F (200° to 430°C) Nickel alloy CW2M (equivalent to Hastelloy ® C-4C(k)	E
Unfilled, 400° to 800°F (200° to 430°C) Stainless Steel Type CF3M	G

Electronics Housing Mounting, Material, and Conduit Connections

Integral Top Mounted 1/2-NPT Conduit Connections	T
Integral Top Mounted M20 Conduit Connections[b]	V
Remote Mounted 1/2-NPT Conduit Connections[a]	R
Remote Mounted M20 Conduit Connections[a][b]	W

84F Flanged Version (continued)

Local Digital Indicator/Configurator

No Digital Indicator/Configurator (Blind Unit)	N
Full Function Digital Indicator/Configurator	J

Electrical Safety (Also see Electrical Safety Specifications section for further details)

ATEX intrinsically Safe; II 1G II 2D Ex ia IIC T4 Ga Ex tb IIIC T103°C Db; not available with Mounting Codes T and R	E
ATEX flameproof; not available with Mounting Codes T and R:	H
For II 2/1 (1) G II 2D Ex d [ia Ga] ia IIC T4 Gb Ex tb IIIC T85°C Db; available with Mounting Code V only	
For II 2/1 (1) G II 2D Ex d [ia Ga] IIC T4 Gb Ex tb IIIC T85°C Db; available with Mounting Code W only	
For II 1G II 2D Ex ia IIC T4 Ga Ex tb IIIC T103°C Db; available with Mounting Code W only	
CSA intrinsically safe; Division 1; also zone certified Ex ia IIC	C
CSA nonincendive; Division 2	M
CSA explosionproof; Division 1	D
FM intrinsically safe; Division 1; also zone approved AEx ia IIC	F
FM nonincendive; Division 2	K
FM explosionproof; Division 1	G
IECEx intrinsically safe; Ex ia IIC T4 Ga Ex tb IIIC T103°C Db; not available with Mounting Codes T and R	L
IECEx flameproof; not available with Mounting Codes T and R:	B
For Ex d [ia Ga] ia IIC T4 Gb Ex tb IIIC T85°C Db; available with Mounting Code V only	
For Ex d [ia Ga] IIC T4 Gb Ex tb IIIC T85°C Db; available with Mounting Code W only	
For Ex ia IIC T4 Ga Ex tb IIIC T103°C Db; available with Mounting Code W only	
NEPSI intrinsically safe, Zone 0, Ex ia IIC; not available with Mounting Codes T and R	R
NEPSI flameproof, Zone 1, Ex d IIC; not available with Mounting Codes T and R	S
No Agency Electrical Certifications; with CE mark, PED Controls and Records	Y
No Agency Certifications; no CE mark; Units not to be installed in European Union (EU) countries	Z

Optional Selections

Cable Length Selection for Remote Electronics Housing

20 ft (6 m) Cable to Connect to Remote Electronics Housing	-B
30 ft (9 m) Cable to Connect to Remote Electronics Housing	-D
40 ft (12 m) Cable to Connect to Remote Electronics Housing	-E
50 ft (15 m) Cable to Connect to Remote Electronics Housing	-G

Cleaning – Oxygen/Chlorine Service

Cleaning of Process Wetted Parts per Compressed Gas Association's CGA G-4.1 and ASTM G93	-H
Available only with Body/Flange/Shedder Material Code R and Y.	
Not available with Line Sizes 10 and 12 or with Isolation Valve Codes D, K, and L.	
Not available with Extended Temperature Codes E and G.	

Sensor Plating

Gold Plated Sensor	-J

Foxboro Certificates of Compliance/Conformance

Standard Certificate of Compliance	-L
Foxboro Material Certification of Process Wetted Metal (Conforms to BS EN 10204 3.1)	-M
Process Wetted Parts Conform to NACE Standard MR-01	-Q

Foxboro Calibration Certificate

Calibration and Pressure Test Certified Copy	-N

Cable Connectors – with Electrical Housing Codes T and R only (1/2 NPT)

Hawke-Type Cable Gland (Available only with Electrical Safety Codes E, H, Y, and Z)	-P
PG11 Cable Gland, Trumpet Shaped (Not available with explosionproof/flameproof certifications)	-R

Conduit Fitting

Adapter for use with 1/2 NPT conduit (Available with Remote Mounted Housing Code R only)	-T

Welding Certificate (Size Codes 06 through 12 only)

Welding certified to conform to ASME Boiler and Pressure Vessel Code, Section IX	-F
Radiographic Examination (X-Ray) of Flange Welds	-V
Welding certified to conform to ASME Boiler and Pressure Vessel Code, Section IX and Radiographic Examination (X-Ray) of welds	-X

Instruction Manual

Detailed Instruction Manual in place of Universal MI 019-145	-C

Notes

(a) For remote mounting, select optional cable length.
(b) For ATEX and IECEx certifications, select M20.
(c) For Line Sizes 3Q, 01, and 1H, select End Connection H.
(d) See Welding Certificate Option -X for extended temperature range (400° to 800 ° F)(200° to 430° C).
(e) Contact Invensys for availability in Style B.
(f) High Temperature Sensors are not available with Body, Flange, and Shedder Bar Material selection D (Duplex SS).
(g) For Line Sizes 3Q, 01, and 1H, select End Connection 8.
(h) Only electrical certifications F, K, and G are available with these model codes at this time.
(i) Available with ANSI End Connections 1, 2 and 3 for Line Sizes 3Q through 08, and End Connections 1 and 2 for Line Sizes 10 and 12.
(j) These versions should only be used when replacing a Model 84F Style A meter or for stocking purposes for Model 84F Style A meters.
(k) Hastelloy® is a registered trademark of Haynes International Inc.
(l) For Line Size 08 with 4, 9, S, T, K, and M End Connections, Welding Certificate Option -X is required.

84W: Wafer Version

How to Order 84W: Wafer Version—Specify model number 84W followed by order code for each selection

Electronics Type							
Intelligent Electronics, HART Communication Protocol, with Pulse Output	-T						
Intelligent Electronics, HART Communication Protocol, without Pulse Output	-U						
Intelligent Electronics, Low Power, HART Protocol, with Pulse Output[c]	-L						
Intelligent Electronics, Low Power, HART Protocol, without Pulse Output[c]	-M						
Nominal Line Size							
3/4 in (DN 15) Line Size		3Q					
1 in (DN 25) Line Size		01					
1 1/2 in (DN 40) Line Size		1H					
2 in (DN 50) Line Size		02					
3 in (DN 80) Line Size		03					
4 in (DN 100) Line Size		04					
6 in (DN 150) Line Size		06					
8 in (DN 200) Line Size		08					
Body and Shedder Bar Material							
ASTM A351-CF8M (316 ss) Cast Body and Shedde			S				
ASTM A494-CW2M (Hastelloy C) Cast Body and Shedder; With Size Codes 3Q to 04 only			H				
Mounting and Centering Systems							
Centering for ANSI Class 150, 300, and 600 Flanges Sizes 3Q through 04 only				1			
Centering for PN 16 Flange Sizes 01 through 03 only							
Centering for PN 40 Flange Sizes 01 through 03 and 06 and 08 only							
Centering for PN 63 and PN 100 Flanges All line sizes							
Centering for ANSI Class 600 Flange Sizes 06 and 08 only				3			
Centering for PN16 Flange Sizes 04, 06, and 08 only				4			
Centering for PN40 Flange Size 04 only				5			
Centering for PN 16 and PN 40 Flanges Size 3Q only				9			
Isolation Valve and Manifold							
S = No Isolation Valve or Manifold					S		
K = Manifold with Isolation Valve, ASTM A 351-CF8M Stainless Steel (316 ss)					K		
Sensor Fill, Temperature Range, and Material							
Standard Temperature Range (with Fill Fluid)							
Fluorolube Fill 0 to 200°F (-20 to 90°C) Hastelloy						D	
Fluorolube Fill 0 to 200°F (-20 to 90°C) Stainless Steel						F	
Silicone Fill 0 to 400°F (-20 to 200°C) Hastelloy						R	
Silicone Fill 0 to 400°F (-20 to 200°C) Stainless Steel						S	
Extended Temperature Range (No Fill Fluid)							
Unfilled, 300 to 800°F (150 to 430°C) Hastelloy Type CW2M [b]						C	
Unfilled, 300 to 800°F (150 to 430°C) Stainless Steel Type CF3M [b]						T	
Electronics Housing Mounting, Material, and Conduit Connections							
T = Integrally Mounted to Flowtube; Aluminum Housing, 1/2 NPT Conduit Connection							T
V = Integrally Mounted to Flowtube; Aluminum Housing, M20 Conduit Connection							V
R = Remote Mounted; Aluminum Housing, 1/2 NPT Conduit Connection [a]							R
W = Remote Mounted; Aluminum Housing, M20 Conduit Connection [a]							W
Local Digital Indicator/Configurator							
N = No Digital Indicator/Configurator (Blind Unit)							N
J = Full Function Digital Indicator/Configurator							J

84W: Wafer Version (continued)

Electrical Safety (Also see Electrical Safety Specifications section for further details)

ATEX intrinsically Safe; II 1 GD, EEx ia IIC; T4 (not available with mounting Codes T and R)..	E
ATEX flameproof: for II 2/1 (1) GD, EEx d [ia] ia, T4; with Mounting Code V only. for II 2 (1) GD, EEx d [ia], T4; with Mounting Code W only. for II 1 GD, EEx ia IIC; T4; with Mounting Code W only.	H
CSA intrinsically safe; Division 1; T4..	C
CSA Nonincendive; Division 2, T4.	M
CSA explosionproof; Division 1; T5.	D
FM intrinsically safe; Division 1; T4	F
FM nonincendive; Division 2, T4..	K
FM explosionproof; Division 1; T5.	G
IECEx intrinsically safe; Ex ia IIC, T4; Dust-ignitionproof Ex tD A20, IP66 (not available with Mounting Codes T and R).	L
IECEx flameproof: Ex d [ia] ia IIC; Dust-ignitionproof Ex tD A20, IP66; with Mounting Code V only. Ex d [ia]; Dust-ignitionproof Ex tD A20, IP66; with Mounting Code W only. Ex ia IIC; Dust-ignitionproof Ex tD A20, IP66; with Mounting Code W only.	B
NEPSI intrinsically safe, Zone 0, Ex ia IIC (not with mounting codes T and R)	R
NEPSI flameproof, Zone 1, Ex d IIC (not with mounting codes T and R)	S
No Agency Electrical Certifications; (with CE mark, PED Controls and Records).	Y
No Agency Certifications; (no CE mark; Units not to be installed in European Union (EU) countries).	Z

Optional Selections

Cable Length Selection for Remote Electronics Housing

20 ft (6 m) Cable to Connect to Remote Electronics Housing	-B
30 ft (9 m) Cable to Connect to Remote Electronics Housing	-D
40 ft (12 m) Cable to Connect to Remote Electronics Housing	-E
50 ft (15 m) Cable to Connect to Remote Electronics Housing	-G

Cleaning - Oxygen/Chlorine Service

Cleaning of Process Wetted Parts per Compressed Gas Association's CGA G-4.1 and ASTM G93 Not available with Isolation Valve Code K or Sensor Codes C and T	-H

Sensor Plating

Gold Plated Sensor.	-J

Foxboro Certificates of Compliance/Conformance

Standard Certificate of Compliance	-L
Material Certification of Process Wetted Metal (Conforms to BS EN 10204 3.1)	-M
Process Wetted Parts Conform to NACE Standard MR-01	-Q

Foxboro Calibration Certificate

Foxboro Calibration and Pressure Test Certified Copy	-N

Cable Connectors – with Electrical Housing Codes T and R only (1/2 NPT)

Hawke-Type Cable Gland	-P
PG11 Cable Gland, Trumpet Shaped	-R

Conduit Fitting

Adapter for use with 1/2 NPT conduit (Available with Remote Mounted Housing Code R only)	-T

Instruction Manual

Detailed Instruction Manual in place of Universal MI 019-145	-C

Notes

(a) With remote mounted electronics housing, you must also select Optional Cable Length -B, -D, E, or G.

(b) Application ALERT: For Extended Temperature Range sensors used in hazardous or volatile gas applications, there is the potential of fugitive emissions to occur through the sensor vented restrictor if the sensor diaphragm were to fail.

(c) The Low Power Vortex Flowmeter is not available with a 4 to 20 mA output.

84S: Sanitary Vortex Flowmeter

How to Order—Specify model number 84S followed by order code for each selection

Electronics Type						
Intelligent Electronics, HART Communication Protocol, with Pulse Output	-T					
Intelligent Electronics, HART Communication Protocol, without Pulse Output	-U					
Intelligent Electronics, Low Power, HART Protocol, with Pulse Output[c]	-L					
Intelligent Electronics, Low Power, HART Protocol, without Pulse Output[c]	-M					
Nominal Line Size						
2 in (DN 50), Stainless Steel Tubing		02				
3 in (DN 80), Stainless Steel Tubing		03				
End Connection Type (Welded to Flowmeter Body) [a]						
3A I-Line Fitting, Mates with Cherry Burrell 15 WI or Equivalent			C			
ANSI Class 150 RF Flange (b)			F			
Metric (DIN 11851) Coupling with External Knuckle Thread, per DIN 405, Part 1			M			
RJT Coupling per BS 1864, with External Whitworth Thread, 6 TPI			R			
3A Tri-Clamp Type Quick-Disconnect Ferrule, Mates with Tri-Clover 14 WMP, or equivalent			T			
ISS (ISO 2853) Coupling with External Trapezoidal Thread, 8 TPI			U			
Local Digital Indicator/Configurator						
No Digital Indicator/Configurator (Blind Unit)				N		
Full Function Digital Indicator/Configurator				J		
Electronics Housing Material and Conduit Connections						
Remote Mounted; Aluminum Housing; 1/2 NPT Conduit Connections					R	
Remote Mounted; Aluminum Housing; M20 Conduit Connections					W	
Electrical Safety (Also see Electrical Safety Specifications section)						
ATEX intrinsically Safe; II 1 GD, EEx ia IIC; T4; with Housing Code W only.						E
ATEX flameproof; for II 2 (1) GD, EEx d [ia] IIC; T4; with Housing Code W only.						H
CSA intrinsically safe; Division 1 / Zone 0; T4.						C
CSA nonincendive; Division 2; T4						M
CSA explosionproof; Division 1 / Zone 0; T5.						D
FM intrinsically safe for Ex ia Class I, Division 1 Groups A,B,C and D, Class II and III, Division 2 Groups E, F and G, T4 @ 80°C. Dust-ignitionproof for Class II and III, Division 1, Groups C and D						F
FM nonincendive Class I, II and III, Division 2, Groups A,B,C,D,F and G, T4 @ 80°C						K
FM explosionproof for Class I, Division 1, Groups B,C and D, T6 @ 80°C						G
IECEx intrinsically safe; Ex ia IIC; T4; Dust-ignitionproof Ex tD A20, IP66 with Mounting Code W only.						L
IECEx flameproof; Ex d [ia] IIC; T4; Dust-ignitionproof Ex tD A20, IP66 with Mounting Code W only.						B
NEPSI Intrinsically Safe, Zone 0, Ex ia II C, T4 (-20C to 80C or -40C to 80C w/o display)						R
NEPSI Flameproof, Zone 1, Ex d II C, T5 (except acetylene) (-20C to 85C or -40C to 85C w/o display).						S
No Agency Electrical Certifications; (with CE mark, and PED Controls and Records).						Y
No Agency Certifications; (no CE mark; Units not to be installed in European Union (EU) countries).						Z
Optional Selections						
Foxboro Certificates of Compliance/Conformance						
Standard Certificate of Compliance						-L
Material Certification of Process Wetted Metal (Conforms to BS EN 10204 3.1)						-M
Foxboro Calibration Certificate						
Calibration and Pressure Test Certification						-N
Instruction Manual						
Detailed Instruction Manual in place of Universal MI 019-145						-C

Notes

(a) Mating end connections, gaskets, and clamps to be supplied by the user.

(b) WirelessHART Adaptors, Temperature Converters and Gateways can be ordered separately via part numbers 217233, 217234, 211735, 220390, 211734, 219035 and 211749 .

(c) Models 11, 13, & 15: CERT-K only available with MR-01. Models 40, 43, & 45: CERT-K limited to PB-AM, PB-BM, DE-A with MR-01, or DE-B with MR-01.

CFS10 Coriolis Mass Flowtubes

- Single Continuous, Thick Walled, Full Bore Flowtube
  - ✔ *virtually eliminates tube fatigue failure.*
  - ✔ *low pressure loss.*
  - ✔ *self-draining in a vertical line.*
  - ✔ *provides positive cleaning.*
  - ✔ *excellent for most fluids, slurries, and shear sensitive liquids.*
- Patented Antiphase Double Driver, Double Sensor with Synchronous Mode Demodulation
  - ✔ *accurate measurement of the Coriolis force at low flow rates.*
  - ✔ *low power consumption for intrinsic safety.*
- Flowtube Assembly Provides:
  - ✔ *improved dependability*
  - ✔ *excellent accuracy at low flow rates.*
  - ✔ *application versatility.*
  - ✔ *ease of installation or retrofit.*

The CFS10 Series Mass Flowtubes utilize the Coriolis Principle to provide true mass flow rate measurements directly, without the need for external temperature, pressure, or specific gravity (S.G.) input.

For complete specifications, refer to Product Specification Sheet PSS 1-2B1 A.

3

Functional Specifications

Nominal Mass Flow Rate Ranges:

Flowtube Size		Mass Flow Rate Range			
		Nominal	Extended Upper Ranges[1]		
in	mm	kg/min	lb/min	kg/min	lb/min
1/8	3	0.03 to 3	0.07 to 7	7	15
1/4	6	0.09 to 9	0.2 to 20	22	48
1/2	15	0.4 to 40	0.9 to 90	73	160
3/4	20	0.9 to 90	2 to 200	119	261
1	25	1.8 to 180	4 to 400	244	536
1.5	40	4 to 400	9 to 900	607	1335
2	50	7 to 700	15 to 1500	1023	2250

Process Density: Process fluid ranges from 200 to 3000 kg/m^3 (12.5 to 187 lb/ft) or a specific gravity range of 0.2 to 3. Note that a specific gravity of 1 corresponds to a fluid density of 1000 kg/m^3(62.4 lb/ft^3).

Flowtube Limits[2]:

Size		Process Temp.		Maximum Working Pressure	
mm	in	°C	°F	bar	psig
3 & 6	1/8 & 1/4	40	100	207	3000
		100	200	174	2530
		150	300	156	2270
		180	356	148	2144
15-50	1/2 - 2	40	100	99	1440
		100	200	85	1240
		150	300	77	1120
		180	356	75	1080

Normal Operating Condition Limits:

Process Temperature: -200 and +180°C (-328 & +356°F).
Ambient Temperature: -40 and +85°C (-40 & +185°F).
Relative Humidity: 5 and 100%

End Connection Limits:

Type	Process Temp.	Max. Working Pressure (316/316L Flanges)	Hastelloy C-2
ANSI Class 150	100°F	275 psig	290 psig
	200°F	240 psig	260 psig
	300°F	215 psig	230 psig
	356°F	204 psig	213 psig
ANSI Class 300	100°F	720 psig	750 psig
	200°F	620 psig	750 psig
	300°F	560 psig	730 psig
	356°F	535 psig	713 psig
ANSI Class 600	100°F	1440 psig	1500 psig
	200°F	1240 psig	1500 psig
	300°F	1120 psig	1455 psig
	356°F	1067 psig	1421 psig
BS 4504 (DN) PN 10/16/25/40	50°C	40 bar	40.4 bar[3]
	100°C	34.2 bar	34.2 bar[3]
	150°C	30.8 bar	30.8 bar[3]
	180°C	29.3 bar	29.3 bar[3]
Flange to mate with NPT/ BS21R	Maximum working pressure is limited by the flowtube limits above or by the BS4504(1969) user's end connection, whichever is PN100/2(DN) less. Maximum working pressure is limited by the flowtube limits above.		

Notes

1 Extended upper range is based on a fluid specific of 0.8 at a temperature of 100°C, 212°F. To find the extended upper range at other specific gravities and temperatures, contact Foxboro.
2 Linear interpolation is acceptable.
3 To obtain MPa value, divide bar value by 10. To obtain kPa value, multiply bar value by 100.

Performance Specifications

Accuracy (Flow Rate):±0.15% of reading, or ±0.015% of nominal flow range, whichever is greater.

Accuracy (Density):

Flowtube Size mm	in	Accuracy (Density)
3 to 6	1/8 to 1/4	±0.0025 g/cm3 (0.04 lb/ft3)
15 to 50	1/2 to 2	±0.0015 g/cm3(0.024 lb/ft3)

Accuracy (Temperature) ±1°C (±1.8°F) for process fluid temperatures between -60 and +100°C (-76 and +212°F). Or ±3°C (±5.4°F) for process fluid temperatures from -130 to -60°C (-202 to -76°F) and from 100 to 180°C (212 to 356°F).

Note: Stated flow rate accuracy includes the combined effects of linearity, hysteresis, repeatability, and zero offset

Physical Specifications

Enclosure: Welded AISI Type 304 stainless steel. Hermetically sealed with 70kPa (10.15 psia) internal pressure.

How to Order—Specify model number CFS10 followed by the order code for each section

Nominal Flowtube and Flange Size (Sensor)

3 mm (1/8 in)	02
6 mm (1/4in)	03
15 mm (1/2in)	05
20 mm (3/4in)	08
25 mm (1in)	10
40 mm (1 1/2in)	15
50 mm (2in)	20

Flowtube Wetted Material

AISI Type 316L Stainless Steel	S
Hastelloy C22 only sizes "02", "03", "05", "10"	H

End Connections[c]

Threaded, NPT, ANSI B2.1 (not available with code 10, 15 or 20 above)	A
ANSI Class 150 flange (not available with code 02)	C
ANSI Class 300 flange (not available with code 02)	D
ANSI Class 600 flange (not available with code 02)	E
PN 10/16, 25/40 flange (not available with code 02)	F
PN 100 flange, mates with BS4504, Part 4, 1969 (100/2) (not available with code 02)	J
DIN Coupling With External Thread, DIN 11851	N
For Mating To Tri-Clamp, Quick Disconnect Ferrule	P

CFS10 Flowtube (continued)

Electrical Classification (Refer to Foxboro for details)

ATEX (KEMA), II 2 G, EEx ib, IIB; T2–T6[a]	MMM
ATEX (KEMA), II 3 G, EEx nA, II; T3 - –T6[a]	LLL
CSA, Nonincendive for use in Class I, Division 2, Hazardous Locations[a]	CNN
FM, Intrinsically Safe, Class I, Division 1, Groups C and D[a]	FBB
FM, Nonincendive for Class I, Division 2, Groups A, B, C, and D[a]	FNN
CSA/CSAus Division 1/Zone 0 Intrinsically Safe[b]	CAA
CSA/CSAus Division 2/Zone 2 Non-Incendive[b]	CCN
FM Division 1/Zone 0 Intrinsically Safe[b]	FAA
FM Division 2/Zone 2 Non-Incendive[b]	FFN
ATEX Intrinsic safe Ex ia/ic[f]	AA
ATEX Non Sparking Zone 2 Ex nA[b]	ANN
IECEx Intrinsic safe Ex ia/ic[b]	EAA
IECEx Non Sparking Zone 2 Ex nA[b]	ENN

Optional Features

Bidirectional flow calibration	B
Cryogenic applications for temperatures below -130°C (-202°F)	C
Radiography of pressure retaining welds. A copy of the Quality Assurance Department's radiographic inspection report on the process containment welds is provided	X
Foxboro material certification of process wetted metal (conforms to DIN 50049, Paragraph 3.1B)	M
Weight & Measures custody transfer/NTEP	T
Optional tamperproof sealing for terminal block	S

Specify One

Calibrated for use with a CFT50/CFT51 transmitter (default)	E
Calibrated for use with a CFT10 or CFT15 transmitter	F
Dual calibrations for use with a CFT10, CFT15, CFT50/CFT51 transmitter	G
Nominal Flowtube -02	
All other sizes	

Model Code-Cable[d]

Cable Insulation Material

PVC-Insulated cable, -20 to +80°C (-4 to +176°) Ambient	KFS1
FEP-Insulated cable, -40 to +85°C (-40 to +185°) Ambient	KFS2

Cable length

20 feet	-F0020
50 feet	-F0050
100 feet	-F0100
200 feet	-F0200
500 feet	-F0500
750 feet	-F0750
1000 feet	-F1000
6 meters	-M006
15 meters	-M015
30 meters	-M030
60 meters	-M060
150 meters	-M150
225 meters	-M225
300 meters	-M300

Specify flow data (rate, pressure, temperature, density, vapor pressure, etc.)
Specify information for instrument tag

Notes

(a) Applies to tubes used with CFT50 only.
(b) Applies to tubes used with CFT51 only.
(c) 1/4" meter utilizes a 1/2" flange when end connections C thru F are selected.
(d) Recommended standard cable:
- Cable manufacturer: Belden
- Manufacturer part number: 8778
- Voltage rating: 30V ac
- Insulation jacket material: PVC/PVC
- Ambient temperature limits: -20 and +80° C (-4 and +176°F)

CFS10 Sanitary Mass Flowtubes

The CFS10 Series I/A Series Sanitary Mass Flowtubes utilize the Coriolis Principle to provide true mass flow rate measurements directly, without the need for external temperature, pressure, or specific gravity (S.G.) inputs. Ideally suited for general Food and Drug Industry applications. Process wetted parts are stainless steel and finished to Sanitary Standards. Flowtube is free from internal crevices, and allows for in-line cleaning using various combinations of cleaning solutions.

For complete specifications, refer to Product Specification Sheet PSS 1-2B1 A.

- 3A Authorized
- Single Continuous, Thick Walled, Full Bore Flowtube
  - ✔ *virtually eliminates tube fatigue failure.*
  - ✔ *low pressure loss*
  - ✔ *self-draining in a vertical line.*
  - ✔ *provides positive cleaning.*
  - ✔ *excellent for clean fluids, slurries, and shear sensitive liquids.*
- Patented Antiphase Double Driver, Double Sensor with Synchronous Mode Demodulation
  - ✔ *accurate measurement of the Coriolis force at low flow rates,*
  - ✔ *low power consumption for intrinsic safety.*
- Flowtube Assembly Provides:
  - ✔ *improved dependability*
  - ✔ *excellent accuracy at low flow rates.*
  - ✔ *application versatility.*
  - ✔ *ease of installation or retrofit.*
- Wide Range of Sanitary End Connections
  - ✔ *Formatting with Tri-Clover Quick-Disconnect Ferrule.*
  - ✔ *DIN coupling with external thread, DIN 11851.*

Physical Specifications

Enclosure: Welded AISI Type 304 stainless steel. Hermetically sealed with 70 kPa (10.15 psia) internal pressure.

Performance Specifications

Accuracy (Flow Rate):
±0.15% of reading, or ±0.015% of nominal flow range, whichever is greater.

Accuracy (Density):

Flowtube Size mm	in	Accuracy (Density)
6	1/4	±0.0025 g/cm^3 (0.04 lb/ft^3)
15 to 50	1/2 to 2	±0.0015 g/cm^3 (0.024 lb/ft^3)

Milk Density Statement: Density accuracy specifications for milk standardization applications: ±0.0005 g/cc provided flowtube is correctly installed per Instruction book 3393.

Accuracy (Temperature): ±1°C (±1.8°F) for process fluid temperatures between -60 and +100°C (-76 and +212°F). Or ±3°C (±5.4°F) for process fluid temperatures from -130 to -60°C (-202 to -76°F) and from 100 to 180°C (212 to 356°F).

Note: Stated flow rate accuracy includes the combined effects of linearity, hysteresis, repeatability, and zero offset.

Process Density: Process fluid ranges from 200 to 3000 kg/m^3 (12.5 to 187 lb/ft^3), or a specific gravity range of 0.2 to 3. Note that a specific gravity of 1 corresponds to a fluid density of 1000 kg/m^3 (62.4 lb/ft^3).

Maximum Process Pressure: 10 bar at 25°C (145 psig at 77°F)

Normal Operating Condition Limits: Process Temperature: -130 and +180°C (-202 & +356°F). Ambient Temperature:-40 and +85°C (-40 & +185°F).

Relative Humidity: 5 and 100%

Functional Specifications

Nominal Flow Rate Ranges:

Flowtube Size		Mass Flow Rate Range			
		Nominal	Extended Upper Ranges[1]		
in	mm	kg/min	lb/min	kg/min	lb/min
1/4	6	0.09 to 9	0.2 to 20	22	48
1/2	15	0.4 to 40	0.9 to 90	73	160
3/4	20	0.9 to 90	2 to200	119	261
1	25	1.8 to 80	4 to 400	244	536
1 1/2	40	4 to 400	9 to 900	607	1335
2	50	7 to 700	15 to 1500	1023	2250

Notes
1 Extended upper range is based on a fluid specific of 0.8 at a temperature of 100°C (212°F). To find the extended upper range at other specific gravities and temperatures, contact Foxboro.

How to Order

Nominal Flowtube and End Connection Size:					
6 mm (1/4 in)	.03				
15 mm (1/2 in)	.05				
20 mm (3/4 in)	.08				
25 mm (1in)	.10				
40 mm (1 1/2in)	.15				
50 mm (2in)	.20				
Flowtube Wetted Material					
AISI Type 316L Stainless Steel prepared for sanitary applications (3A Authorization Number 224)		C			
End Connections(Supplied in AISI Type 316 stainless steel only):[g]					
For mating to tri-clover quick disconnect ferrule		P			
DIN coupling with external thread, DIN 11851		N			
Electrical Classification (Refer to Foxboro for details)					
ATEX (KEMA), II 2 G, EEx ib, IIB; T2–T6 (e)			MMM		
ATEX (KEMA), II 3 G, EEx nA, II; T3 - –T6 (e)			LLL		
CSA, Nonincendive for use in Class I, Division 2, Hazardous Locations[e]			CNN		
FM, Intrinsically Safe, Class I, Division 1, Groups C and D[e]			FBB		
FM, Nonincendive for Class I, Division 2, Groups A, B, C, and D[e]			FNN		
CSA/CSAus Division 1/Zone 0 Intrinsically Safe[f]			CAA		
CSA/CSAus Division 2/Zone 2 Non-Incendive[f]			CCN		
FM Division 1/Zone 0 Intrinsically Safe[f]			FAA		
FM Division 2/Zone 2 Non-Incendive[f]			FFN		
ATEX Intrinsic safe Ex ia/ic[f]			AAA		
ATEX Non Sparking Zone 2 Ex nA[f]			ANN		
IECEx Intrinsic safe Ex ia/ic[f]			EAA		
IECEx Non Sparking Zone 2 Ex nA[f]			ENN		
No Certified Connectivity (CFT51)			YYY		
No Certified Connectivity (CFT50)			ZZZ		
Optional Features					
Bidirectional flow calibration				-B	
Foxboro material certification of process wetted materials (conforms to DIN 50049, Paragraph 3.1B)				-M	
Weight & Measures custody transfer/NTEP[d]				-T	
Optional tamperproof sealing[c]				-S	
Specify One					
Calibrated for use with a CFT50/CFT51 transmitter (default)[b]				-E	
Calibrated for use with a CFT10 or CFT15 transmitter[b]				-F	
Dual calibrations for use with a CFT10, CFT15, or CFT50/CFT51 transmitter[b]				-G	
Model Code-Cable[h]					
Cable Insulation Material					
PVC-Insulated cable,-20 to +80°C (-4 to 176°) Ambient					KFS1
FEP-Insulated cable,-40 to +85°C (-40 to +185°) Ambient					KFS2
Cable length					
20 feet					-F0020
50 feet					-F0050
100 feet					-F0100
200 feet					-F0200
500 feet					-F0500
750 feet					-F0750
1000 feet					-F1000
6 meters					-M006
15 meters					-M015
30 meters					-M030
60 meters					-M060
150 meters					-M150
225 meters					-M225
300 meters					-M300

How to Order Cable–Specify flow data (rate, pressure, temperature, density, vapor pressure, etc.)
Specify information for instrument tag

Notes

(a) IMPORTANT: The flowtube is NOT supplied with cable for transmitter interconnection. Standard cable can be ordered separately. See Cable Model Code for ordering information.
(b) Specify one of either -E, -F, or -G Calibration Options only.
(c) Option -S not available with Electrical Safety Codes MMM and LLL.
(d) Option -T not available with Electrical Safety Codes CNN, MMM, and LLL.
(e) Applies to tubes used with CFT50 only.
(f) Applies to tubes used with CFT51 only.
(g) With codes 03, 05, 08, and 10 above, a 1-inch connector is used.
(h) Recommended Standard Cable:
- Cable Manufacturer: Belden
- Part Number: 8778
- Voltage Rating: 30 V ac
- Insulation/Jacket Material: PVC/PVC
- Ambient Temperature Limits: -20 and +80°C (-4 and 176°F)

CFS20 Coriolis Mass Flowtubes

- Thick Walled Flowtube
  - ✔ *virtually eliminates tube fatigue failure*
  - ✔ *low pressure loss.*
  - ✔ *self-draining in a vertical line.*
- Patented Antiphase Double Driver, Double Sensor with Synchronous Mode Demodulation
  - ✔ *accurate measurement of the Coriolis force at low flow rates.*
  - ✔ *low power consumption for intrinsic safety.*
  - ✔ *insensitive to density variations*
- Flowtube Assembly Provides:
  - ✔ *improved dependability*
  - ✔ *excellent accuracy at low flow rates.*
  - ✔ *application versatility.*
  - ✔ *ease of installation or retrofit.*

Physical Specifications

Enclosure: Welded AISI Type 304 stainless steel. Hermetically sealed with 70kPa (10.15 psia) internal pressure

Process Density: Process fluid density ranges from 200 to 3000kg/m^3 (12.5 to 187 lb/ft^3) or a specific gravity range of 0.2 to 3.

Note: that a specific gravity of 1 corresponds to a fluid density of 1000 kg/m^3 (62.4 lb/ft^3)

Normal Operating Condition Limits:
Process Temperature: -130 and +180°C (202 and +356°F).
Ambient Temperature: -40 and +85°C (-40 and +185°F).
Relative Humidity: 5 and 100%

Notes for End Corrections Limits Table
1. Linear interpolation is acceptable.
2. To obtain MPa value, divide bar value by 10. To obtain kPa value, multiply bar value by 100.
3. 40 mm (1.5 inch) only

The CFS20 Series Mass Flowtubes utilize the Coriolis Principle to provide true mass flow rate measurements directly, without the need for external temperature, pressure, or specific gravity (S.G.) input.
For complete specifications, refer to Product Specification Sheet PSS 1-2B4 A.

Performance Specifications

Accuracy (Flow Rate): ±0.15% of reading, or ±0.015% of nominal flow range, whichever is greater.

Note: Stated flow rate accuracy includes the combined effects of linearity, hysteresis, repeatability, and zero offset.

Accuracy (Density): ±0.0015 g/cm (0.024 lb/ft^3)

Milk Density Statement: Density accuracy specifications for milks standardization applications: ±0.0005 g/cc provided flowtube is correctly installed per Instruction book 3393.

Accuracy (Temperature): ±1°C (±1.8°F) for process fluid temperatures between -60 and +100° C (-76 and +212°F). Or ±3°C (±5.4°F) for process fluid temperatures from -130 to -60°C (-202 to -76°F) and from 100 to 180°C (212 to 356°F).

Nominal Flow Range:
CFS20-15: 9 to 900 lb/min (40 to 400kg/min)
CFS20-30: 40 to 4000 lb/min (18 to 1815 kg/min)

Extended Upper Flow Range:
CFS20-15: 1070 lb/min (485 kg/min)
CFS20-30: 4500 lb/min (2040 kg/min) Based on a fluid specific gravity of 0.8 and 212°F (100°C).To find the extended upper range at other specific gravities and temperatures, contact Foxboro.

Functional Specifications: *Flowtube Limits*[1]

Nominal Flowtube Size mm	in	Process Temperature °C	°F	Max. Working Pressure bar[2]	psig
40 & 80	1.5 & 3	40	100	99	1440
40 & 80	1.5 & 3	100	200	85	1240
40 & 80	1.5 & 3	150	300	77	1120
40 & 80	1.5 & 3	180	356	75	1080

End Connection Limits

Type	Process Temp.	Max. Working Pressure (316/316L Flanges)	Hastelloy C-2[3]
ANSI Class 150	100°F	275 psig	290 psig
	200°F	240 psig	260 psig
	300°F	215 psig	230 psig
	356°F	208 psig	217 psig
ANSI Class 300	100°F	720 psig	750 psig
	200°F	620 psig	750 psig
	300°F	560 psig	730 psig
	356°F	540 psig	719 psig
ANSI Class 600	100°F	1440 psig	1500 psig
	200°F	1240 psig	1500 psig
	300°F	1120 psig	1455 psig
	356°F	1080 psig	1435 psig
BS 4504 (DN) PN 10/16/25/40	50°C	40 bar[2]	41.7 psig
	100°C	34.2 bar[2]	37.1 psig
	150°C	30.8 bar[2]	32.9 psig
	180°C	29.3 bar[2]	30.6 psig
Flange to mate BS4504 (1969) PN 100/2 (DN)	Maximum working pressure is limited with by the flowtubelimits above or by the user's end connection, whichever is less		

How to Order—Specify model number CFS20 followed by order code for each selection

Nominal Flowtube and Flange Size (Sensor):							
40 mm (1.5 in)	15						
80 mm (3 in)	30						
Flowtube Wetted Material: AISI Type 316L							
Stainless Steel (CFS20-30 only)		S					
Hastelloy-C22 (CFS20-15 only)		H					
End Connections[c]							
ANSI Class 150 flange			C				
ANSI Class 300 flange			D				
ANSI Class 600 flange			E				
PN 10/16, 25/40			F				
PN 100 flange, mates with BS4504, Part 4, 1969 (100/2)			J				
Electrical Classification (Refer to Foxboro for details)							
ATEX (KEMA), II 2 G, EEx ib, IIB; T2 -T6[a]				MMM			
ATEX (KEMA), II 3 G, EEx nA, II; T3 - -T6[a]				LLL			
CSA, Nonincendive for use in Class I, Division 2, Hazardous Locations[a]				CNN			
FM, Intrinsically Safe, Class I, Division 1, Groups C and D[a]				FBB			
FM, Nonincendive for Class I, Division 2, Groups A, B, C, and D[a]				FNN			
CSA/CSAus Division 1/Zone 0 Intrinsically Safe[b]				CAA			
CSA/CSAus Division 2/Zone 2 Non-Incendive[b]				CCN			
FM Division 1/Zone 0 Intrinsically Safe[b]				FAA			
FM Division 2/Zone 2 Non-Incendive[b]				FFN			
ATEX Intrinsic safe Ex ia/ic[b]				AA			
ATEX Non Sparking Zone 2 Ex nA[b]				ANN			
IECEx Intrinsic safe Ex ia/ic[b]				EAA			
IECEx Non Sparking Zone 2 Ex nA[b]				ENN			
Optional Features							
Bidirectional flow calibration					B		
Cryogenic applications for temperatures below -130°C (-202°F)					C		
Radiography of pressure retaining welds. A copy of the Quality Assurance Department's radiographic inspection report on the process containment welds is provided					X		
Foxboro material certification of process wetted materials (conforms to DIN 50049, Paragraph 3.1B)					M		
Weights & Measures custody transfer/NTEP[4]					T		
Optional tamperproof sealing for terminal block[4]					S		
Specify One							
Calibrated for use with a CFT50/CFT51 transmitter (default)					E		
Calibrated for use with a CFT10 or CFT15 transmitter					F		
Dual calibrations for use with a CFT10, CFT15, or CFT50/CFT51 transmitter					G		
Model Code-Cable[d]							
Cable Insulation Material							
PVC-Insulated cable,-20 to +80°C (-4 to 176°) Ambient						KFS1	
FEP-Insulated cable,-40 to +85°C (-40 to +185°) Ambient						KFS2	
Cable length							
20 feet							-F0020
50 feet							-F0050
100 feet							-F0100
200 feet							-F0200
500 feet							-F0500
750 feet							-F0750
1000 feet							-F1000
6 meters							-M006
15 meters							-M015
30 meters							-M030
60 meters							-M060
150 meters							-M150
225 meters							-M225
300 meters							-M300

Specify flow data (rate, pressure, temperature, density, vapor pressure, etc.) Specify information for instrument tag

This product and its components are protected by one or more of the following U.S. patents: 4,891,991; 4,911,020; 5,048,350; 5,050,439; 5,271,281; 5,343,764; 5,546,814 and others pending. Corresponding patents have been issued or are pending in other countries.

Notes

(a) Applies to tubes used with CFT50 only
(b) Applies to tubes used with CFT51 only
(c) Contact Foxboro for availability

(d) Recommended Standard Cable:
- Part Number:8778
- Voltage Rating: 30 V ac
- Insulation/Jacket Material: PVC/PVC
- Ambient Temperature Limits: -20 and +80°C (-4 and 176°F)

CFS20 Sanitary Mass Flowtubes

The CFS20 Series Sanitary Mass Flowtubes utilize the Coriolis Principle to provide true mass flow rate measurements directly, without the need for external temperature, pressure, or specific gravity (S.G.) inputs. Ideally suited for general Food and Drug Industry applications. Process wetted parts are stainless steel and finished to Sanitary Standards. Flowtube is free from internal crevices, and allows for in-line cleaning using various combinations of cleaning solutions.

For complete specifications, refer to Product Specification Sheet PSS 1-2B4 A.

- 3A Authorized
- Thick Walled
  - *virtually eliminates tube fatigue failure.*
  - *low pressure loss.*
  - *self-draining in a vertical line.*
- Patented Antiphase Double Driver, Double Sensor with Synchronous Mode Demodulation
  - *accurate measurement of the Coriolis force at low flow rates.*
  - *low power consumption for intrinsic safety.*
  - *insensitive to density variations.*
- Flowtube Assembly Provides:
  - *improved dependability*
  - *excellent accuracy at low flow rates.*
  - *application versatility.*
  - *ease of installation or retrofit.*
- Wide Range of Sanitary End Connections
  - *Tri-Clamp, quick disconnect ferrule.*
  - *RJT coupling with external thread, BS1864.*
  - *ISS/DF coupling with external thread, BS 4825, ISO 2852.*
  - *DIN coupling with external thread, DIN 11851.*

Performance Specifications

Accuracy (Flow Rate): ±0.15% of reading, or ±0.015% of nominal flow range, whichever is greater.

Note: Stated flow rate accuracy includes the combines effects of linearity, hysteresis, repeatability, and zero offset.

Accuracy (Density): ±0.0015 g/cm^3 (0.024 lb/ft^3).

Milk Density Statement: Density accuracy specifications for milk standardization applications: ±0.0005 g/cc provided flowtube is correctly installed per Instruction book 3393.

Accuracy (Temperature): ±1°C (±1.8°F) for process fluid temperatures between -60 and +100°C (-76 and +212°F). Or ±3°C (±5.4°F) for process fluid temperatures from -130 to -60°C (-202 to -76°F) and from 100 to 180°C (212 to 356°F).

Nominal Flow Range: 40 to 4000 lb/min (18 to 1815 kg/min)

Extended Upper Flow Range: 4500 lb/min (2040 kg/min) based on a fluid specific gravity of 0.8 and at 212°F (100°C). To find the extended upper range at other specific gravities and temperatures, contact Foxboro.

Functional Specifications

Process Density: Process fluid density ranges from 200 to 3000 kg/m^3 (12.5 to 187 lb/ft^3), or a specific gravity of 1 corresponds to a fluid density of 1000 kg/m^3 (62.4 lb/ft^3).

Maximum Process Pressure: 10 bar (145 psi) gauge at 25°C (77°F)

Normal Operating Condition Limits:
Process Temperature: -130 and +180°C (-202 and +356°F).
Ambient Temperature: -40 and +85°C (-40 and +185F).
Relative Humidity: 5 and 100%

Physical Specifications

Enclosure: Welded AISI Type 304 stainless steel. Hermetically sealed with 70 kPa (10.15 psia) internal pressure

How to Order—Specify model number CFS20 followed by the order code for each section.

Nominal Flowtube and End Connection Size:						
80mm (3 in)	30					
Flowtube Wetted Material						
AISI Type 316L Stainless Steel prepared for sanitary applications (3A Authorization Number 224)		C				
End Connections (Supplied in AISI Type 316 stainless steel only):						
For mating to tri-clover quick-disconnect ferrule			P			
DIN coupling with external thread, DIN 11851			N			
Electrical Classification (Refer to Foxboro for details)						
ATEX (KEMA), II 2 G, EEx ib, IIB; T2 -T6[a]				MMM		
ATEX (KEMA), II 3 G, EEx nA, II; T3- -T6[a]				LLL		
CSA, Nonincendive for use in Class I, Division 2, Hazardous Locations[a]				CNN		
FM, Intrinsically Safe, Class I, Division 1, Groups C and D[a]				FBB		
FM, Nonincendive for Class I, Division 2, Groups A, B, C, and D[a]				FNN		
CSA/CSAus Division 1/Zone 0 Intrinsically Safe[b]				CAA		
CSA/CSAus Division 2/Zone 2 Non-Incendive[b]				CCN		
FM Division 1/Zone 0 Intrinsically Safe[b]				FAA		
FM Division 2/Zone 2 Non-Incendive[b]				FFN		
ATEX Intrinsic safe Ex ia/ic[b]				AA		
ATEX Non Sparking Zone 2 Ex nA[b]				ANN		
IECEx Intrinsic safe Ex ia/ic[b]				EAA		
IECEx Non Sparking Zone 2 Ex nA[b]				ENN		
Optional Features						
Bidirectional flow calibration					B	
Foxboro material certification of process wetted materials (conforms to DIN 50049, Paragraph 3.1B)					B	
Specify One						
Calibrated for use with a CFT50 transmitter (default)					E	
Calibrated for use with a CFT10 or CFT15 transmitter					T	
Dual calibrations for use with a CFT10, CFT15, or CFT50 transmitter					S	
Model Code-Cable[c]						
Cable Insulation Material						
PVC-Insulated cable,-20 to +80°C(-4 to 176°) Ambient						KFS1
FEP-Insulated cable,-40 to +85°C(-40 to +185°) Ambient						KFS2
Cable length						
20 feet						-F0020
50 feet						-F0050
100 feet						-F0100
200 feet						-F0200
500 feet						-F0500
750 feet						-F0750
1000 feet						-F1000
6 meters						-M006
15 meters						-M015
30 meters						-M030
60 meters						-M060
150 meters						-M150
225 meters						-M225
300 meters						-M300

Specify flow data (rate, pressure, density, vapor pressure, etc.)
Specify information for instrument tag

This product and its components are protected by one or more of the following U.S. patents: 4,891,991; 4,911,020; 5,048,350; 5,050,439; 5,271,281; 5,343,764; 5,546,814 and others pending. Corresponding patents have been issued or are pending in other countries.

Notes
(a) Applies to tubes used with CFT50 only.
(b) Applies to tubes used with CFT51 only.
(c) Recommended Standard Cable:
- Cable Manufacturer: Belden
- Part Number:8778
- Voltage Rating: 30 V ac
- Insulation/Jacket Material: PVC/PVC
- Ambient Temperature Limits: -20 and +80°C (-4 and 176°F)

CFT51 Mass Flow Transmitters

The model CFT51 is an enhanced version of the CFT50 in that it provides all the features available with the CFT50 transmitter, and it also provides on-line flowtube verification and on-line pressure compensation capabilities. The CFT51 Coriolis Mass Flow Transmitter combines with models CFS10 and CFS20 mass flowtubes to form a mass flow and density measuring system. The CFT51 incorporates advanced digital processing to overcome many of the traditionally difficult coriolis challenges such as two phase (gas/liquid) flows and starting and/or finishing empty in batching or dosing applications. PSS 1-2B7 C

- Patented DSP techniques minimize shortcomings of existing Coriolis flowmeters for measurement of two-phase flow, partial empty tube conditions, and batching from empty.
- Digital precision, stability, and resolution ensure top measurement performance over analog transmitters using the same mass flowtube.
- New transmitter technology eliminates need for slug flow software.
- Select from six separate output signal combinations. Each combination of four different signals includes a 4 to 20 mA output with either HART or Modbus protocols.
- Remote communications via HART or Modbus in a single loop or multidrop configuration.
- Totally configurable from the local LCD Indicator using four pushbuttons.
- Available for ac or dc supply voltage applications.
- Transmitter can be remote mounted at distances up to 305 m (1000 ft) from flowtube. Mounting bracket allows remote transmitter to be mounted to a surface, or to a DN50 to DN80 (2 in to 3 in) pipe.
- CFT51 Transmitter is backward compatible to existing CFS10 and CFS20 flowtube. The CFT51 may have some limitations based on certifications.
- Transmitter enclosure satisfies IP66 and NEMA™ requirements.
- Designed for FM, CSA, and ATEX Hazardous Area locations. Applicable agency plate also includes CE mark.

Performance Specifications (under reference operating conditions unless otherwise specified)

Accuracy — Mass Flow Rate (includes linearity, hysteresis, and repeatability): ±0.10% and zero instability (see Table 1) – liquids. ±0.50% and zero instability – gases. Accuracy in % of rate is therefore;

$$\text{Accuracy} = \pm 0.10\% + \left(\frac{\text{Zero Instability}}{\text{Mass Flow Rate}} \times 100\right)\%$$

Table 1. Zero Instability (a)

Flowtube Model	Flowtube Size	Zero Instability kg/min	Zero Instability lb/min
CFS10	3 mm (1/8 in)	0.000016	0.00035
	6 mm (1/4 in)	0.00045	0.001
	15 mm (1/2 in)	0.00204	0.0045
	20 mm (3/4 in)	0.00454	0.010
	25 mm (1 in)	0.00907	0.020
	40 mm (1 1/2 in)	0.0204	0.045
	50 mm (2 in)	0.0340	0.075
CFS20	40 mm (1 1/2 in)	0.0204	0.045
	80 mm (3 in)	0.0907	0.200

(a) In the accuracy equation, Zero Instability and Mass Flow Rate units must be the same.

Accuracy — Density (liquids): ± 0.0005 g/cc^3 provided by built-in density optimization function.

Functional Specifications

Power Requirements:

ac Supply
- Supply Voltage: 102 to 264 V ac
- Supply Frequency: 47 to 63 Hz
- Power: 18 VA maximum

dc Supply
- Supply Voltage: 10 to 36 V dc
- Power: 15 W maximum
- Operating Current: 1 A
- Startup Current: 3 A

Transmitter Capabilities:
- Direct Mass Flow Rate
- Volumetric Flow Rate
- Totalized Mass Flow Rate
- Totalized Volumetric Flow Rate
- Process Fluid Density
- Temperature
- Bidirectional Flow
- Percent Solids/Concentration
- Brix and BaumÈ Scales

Totalization:

The transmitter has nonvolatile RAM for the following:
- Forward Totals
- Reverse Totals

Functional Specifications (continued)

Diagnostics/Alarms:

Diagnostic and alarm functions are provided. These can be configured to be visual via the local display/ keypad, as a signal output via the 4 to 20 mA outputs, or as a contact output.

Response Time (undamped):

The undamped transmitter response time is 35 ms.

Transmitter I/O[1]

- Selectable Frequency Output
- Scaled Pulse Output
- Analog Current Output Alarm
- Analog Current Outputs (multiple)
- Contact Output
- Contact Input
- Quadrature pulse outputs (Modbus)

(1) All transmitter I/O must be externally powered, and are connected at the positive power input.

How to Order—Specify model number CFT51 followed by order code for each selection

Communication Interface (d)								
HART Communication Protocol	-T							
Modbus Communication Protocol	-M							
Mass Flowtube Interface								
Foxboro CFS10 and CFS20 Series Flowtubes	B							
Transmitter Mounting								
Remote Mounted Transmitter		1						
Language								
English			E					
Nominal Supply Voltage								
120 to 240 V ac, 50 or 60 Hz, Externally Powered I/O				A				
10 to 36 V dc , Externally Powered I/O				B				
Local LCD Indicator with Pushbuttons								
None – Blind UnitAmbient					A			
Integral LCD Indicator with Pushbuttons for Local Configuration					B			
Housing Field Cable Entries								
1/2 NPT Connection (Two places)						A		
M20 Connection (Two places)						B		
Interconnecting Cable Material								
No Cable							N	
IPVC Insulated Cable; Temperature Range from -20 to +80°C (-4 to +176°F)							P	
FEP Insulated Cable; Temperature Range from -40 to +85°C (-40 to +185°F)							F	
Interconnecting Cable Length								
No Cable								N
20 foot cable/6 meter cable								G
50 foot cable/15 meter cable								P
100 foot cable/31 meter cable								H
200 foot cable/61 meter cable								J
500 foot cable/152 meter cable								K
750 foot cable/229 meter cable								L
1000 foot cable/305 meter cable								M

Ordering Model Number Selection Table continued next page.

Electrical Safety (Also see Electrical Safety Specifications section) (e)			
ATEX flameproof with intrinsically safe flowtube connections	ADA		
ATEX flameproof with energy limited flowtube connections	ADN		
ATEX nonsparking with intrinsically safe flowtube connections	ANA		
ATEX nonsparking with energy limited flowtube connections	ANN		
CSA/CSAus explosionproof with intrinsically safe flowtube connections	CDA		
CSA/CSAus explosionproof with nonincendive flowtube connections	CDN		
CSA/CSAus nonincendive and energy limited with intrinsically safe flowtube connections	CNA		
CSA/CSAus nonincendive with nonincendive flowtube connections	CNN		
FM explosionproof with intrinsically safe flowtube connections	FDA		
FM explosionproof with nonincendive flowtube connections	FDN		
FM nonincendive with intrinsically safe flowtube connections	FNA		
FM nonincendive with nonincendive safe flowtube connections	FNN		
IECEx flameproof with intrinsically safe flowtube connections	EDA		
IECEx flameproof with energy limited flowtube connections	EDN		
IECEx nonsparking with intrinsically safe flowtube connections	ENA		
IECEx nonsparking with energy limited flowtube connections	ENN		
NEPSI flameproof with intrinsically safe flowtube connections[e]	NDA		
NEPSI flameproof with energy limited flowtube connections[e]	NDN		
NEPSI nonsparking with intrinsically safe flowtube connections[e]	NNA		
NEPSI nonsparking with energy limited flowtube connections[e]	NNN		
No Certifications	ZZZ		
Tamperproof and Custody Transfer Options			
Tamperproof Sealing for Housing and Terminal Block Covers		-S	
Weights and Measures Custody Transfer (NTEP)[b]		-T	
Paint Options			
Epoxy Paint (c)			-E
Mounting Bracket Material and Pipe Size			
Stainless Steel			-F
Carbon Steel, 3-inch pipe			-G
Stainless Steel, 3-inch pipe			-H

Notes

(a) The Model CFT51 is an enhanced version of the Model CFT50 Digital Coriolis Mass Flow Transmitter. Other than its physical configuration, it offers the same features as the Model CFT50, but with additional features, particularly applications for Bunker Fuel Custody Transfer and Wet Gas Allocation measurements.

(b) When used with the Models CFS10 and CFS20 Style B Flowtubes, the flowtubes must also have Option -T (NTEP). Also, Option -T is only available with Electrical Safety Codes FDA, FDN, FNA, and FNN, and only available with LCD Indicator with Keypad Code B.

(c) Epoxy paint finish option applies to the enclosure body; the enclosure covers use an epoxy paint finish as standard.

(d) Factory default setting. Transmitters with display and keypad may be changed in the field.

(e) These transmitters have been designed to meet the electrical safety specifications listed in the table above. Contact Invensys (see back page) for the status of agency approvals or certifications.

Specify information for instrument tag

High Power, ExPulse, Magnetic Flowmeters 2800 Series PTFE Lined Flowtubes, IMT96 Series Transmitter

A Magnetic Flowmeter consisting of a flowtube, signal cable, and Transmitter measures flow rate of conductive liquids and transmits a proportional electrical signal.

For complete information on all options, specifications and ordering instructions, refer to Product Specification Sheets PSS 1-6B5 A, C & E (Flowtubes) and PSS 1-6F8 A (IMT96 Series Transmitter) and PSS 1-6C1 A (E96 Series Transmitter).

- Obstructionless Tube
  - *PTFE liner 15 and 600 mm (1/2 to 24 in.)*
  - *Polyurethane Liner 50mm and 900mm (2 to 36 in.)*
  - *Neoprene Liner 350mm and 900mm (14 to 36 in.))*
  - *Refer to Product Specification Sheets PSS 1 6B5 A & E for specifications and ordering information on polyurethane and neoprene liner options.*
- Designed for Wide Variety of Applications
  - *Suitable for all conductive liquids and slurries.*
- IMT96 Series Transmitter
  - *Choice of Digital, analog, or Pulse Output Signals. Refer to PSS 1-6F8 A for Product Specifications.*
  - *Surface or pipe mounting options.*

Functional Specifications

Flow Rates: Minimum and Maximum Upper Range Limits

Flowtube Size		Upper Range Limits IMT96 Series ac Transmitter			
		L/m		US gpm	
mm	in	min	max	min	max
15	1/2	4.2	75	1.1	20
25	1	15	290	4.0	76
40	1.5	37.8	740	10	195
50	2	60	1260	16	335
80	3	132	2900	35	770
100	4	246	5100	65	1350
150	6	570	11400	150	3000
200	8	1020	19500	260	5150
250	10	1500	31000	400	8200
300	12	2280	44200	600	11700
350	14	3410	54500	900	14400
400	16	4540	72000	1200	19000
450	18	5680	91000	1500	24000
500	20	7190	114000	1900	30000
600[1]	24[1]	11400	162000	3000	43000

Process Temperature and Pressure Limits (PTFE):

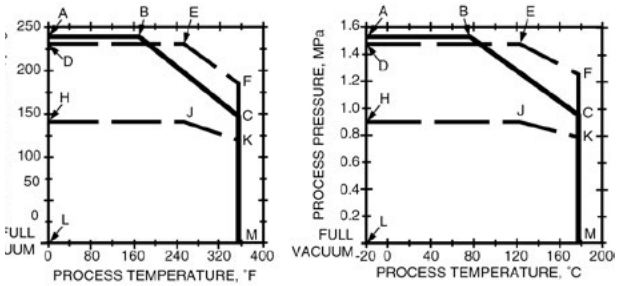

Process temperature and pressure must be within the boundaries:

LABCM for flowtubes with ANSI Class 150 and 300 flanges.
LHJKM for flowtubes with PN 10 flanges.
LDEFM for flowtubes with PN 16, 25, and 40 flanges.

Refer to Foxboro for applications involving elevated pressure.

Performance Specifications

Accuracy— Digital and Pulse Outputs[2]

Flow System	Tube Size	System Accuracy
2800 Flowtube and IMT96	15 to 300mm (1/2 to 12 in)	±0.50% of rate
Transmitter	400 to 900mm (14 to 36 in)	±1.0% of rate

Minimum Conductivity of Process Fluid: 2 µmho/cm

Ambient Temperature Limits:
Flowtube: -30 and +60°C (-20 and +140°F).
Transmitter: -30 and +70°C (-25 and +160°F).

Electrical Classification: FM and CSA certified versions available for ordinary locations, and Division 2 hazardous locations. Refer to Foxboro for complete specifications.

Physical Specifications

Enclosure Classification: Flowtubes (280H through 2824 Series) and Transmitters. Meets the requirements of IEC IP65 and provides the environmental protection of NEMA Type 4X.

Electrode Materials: See How to Order.

Lining Materials: PTFE[3]

Mounting:
Flowtube: By process connection flanges. See How to Order.
Transmitter: Pipe; Bracket for mounting to DN 50 or 2 in pipe.
Surface; Plate permits mounting to surface such as a wall.

How to Order—Specify Flowtube Model Number

Nominal Line Size[4]				
15 mm (1/2 in)	280H			
25 mm (1in)	2801			
40 mm (1 1/2 in)	281H			
50 mm (2 in)	2802			
80 mm (3 in)	2803			
100 mm (4 in)	2804			
150 mm (6 in)	2806			
200 mm (8 in)	2808			
250 mm (10 in)	2810			
300 mm (12 in)	2812			
350 mm (14 in)	2814			
400 mm (16 in)	2816			
450 mm (18 in)	2818			
500 mm (20 in)	2820			
600 mm (24 in)[5]	2824			
Tube Construction				
Type 304 ss, Schedule 10 (2801 through 2812 only)		SA		
310 ss, Schedule 40 (280H only)		SB		
304 ss, 3.18 mm (0.125 in) wall (2814 through 2824 only)		SE		
End Connections[4]				
ANSI Class 150 raised face (RF) flange carbon steel (280H through 2824)			BA	
ANSI Class 150 RF flange, AISI Type 316 ss (280H through 2808 only)			BB	
ANSI Class 300 RF flange, as (280H through 2808 only)			BD	
PN 10 RF flange, cs (280H through 2824 only)			ZD	
PN 16, cs (280H through 2812 only)			ZE	
PN 25, cs (280H through 2808 only)			ZF	
PN 40, cs (280H through 2808 only)			ZG	
PN 10, 316 ss (280H through 2808 only)			ZL	
PN 16, 316 ss (280H through 2808 only)			ZM	
PN 25, 316 ss (280H through 2808 only)			ZN	
PN 40, 316 ss (280H through 2808 only)			ZP	
PN 6, cs (2814 through 2824 only)			ZZ	
Lining[4]				
PTFE				T
Electrodes				
316L ss				S
Hastelloy C				H
Platinum–10% iridium				P
Tantalum-tungsten				B
Titanium				T
Conical shaped, 316L ss (2801 through 2824 only)				C
Conical shaped, Hastelloy C (2801 through 2824 only)				K

Nominal Supply Voltage and Frequency

For use with 120 V, 60 Hz (E96), (2810 and 2824 Parallel Coils only)	A
For use with 240 V, 60 Hz (E96), (280H through 2808 Parallel Coils not Available)	B
For use with 120 V, 50 Hz (E96)	C
For use with 220 V, 50 Hz (E96)	D
For use with 240 V, 50 Hz (E96), (Series Coils Only)	E
Pulsed dc from 896 Transmitter (Series Coils Only)	F
Either Pulsed dc from 896 Transmitter or 120 V, 60 Hz (E96)	G
For use with IMT96, 60 Hz	K
For use with IMT96, 50 Hz	L
For use with IMT96 or 120 V, 60 Hz (E96)	M
For use with IMT96 or 240 V, 60 Hz (E96)	N
For use with IMT96 or 120V, 50 Hz (E96)	Q
For use with IMT96 or 230 V, 50 Hz (E96)	R
For use with IMT96 or 240V, 50 Hz (E96)	S

Housing

General purpose, NEMA 4X Housing	G
Submersible Accidental and Total Submergence (280H to 2812)	N
High humidity/condensate	C
Accidental Submergence (2814 through 2824 only)	H

Options

Cable Glands (not with -S option)	G
Signal Cable Seal (not with -G option)	S
PTFE Lining Protector (280H through 2812 only)	T
Ultrasonic Electrode Cleaning (transducer with oscillator and cable) (2802 and 2824 only)	U
Ultrasonic Electrode Cleaning (transducer, cable and junction box for portable oscillator) (2802 and 2824 only)	W
PUltrasonic Electrode Cleaning (transducer only) (2802 and 2824 only)	Z

Specify electrical classification.

Specify:

- **Flow range (normal and maximum)**
- **Liquid composition**
- **Liquid conductivity**
- **Operating temperature (normal and maximum)**
- **Operating pressure (normal and maximum)**

Specify information for instrument tag.

How to Order—Specify Transmitter Model Number IMT96

Transmitter Mounting

Pipe Mounting	P
Surface Mounting or Wall Mounting or Panel Mount	S

Language

English Only	E

Nominal Power Supply and Frequency

120 Vac, 47 to 63 Hz	A
230 Vac, 47 to 63 Hz	B
240 Vac, 47 to 63 Hz	C

Digital Communication Protocol

HART Communication Protocol	T

Integral Display/Keypad

Wide Angle LCD Display/Keypad[6]	B

Transmission Signal Output[7]

Internally Powered, 4-20 mA and Superimposed Digital (1200 Baud HART or 600 Baud FoxCom)	1
Externally Powered, 4-20 mA and Superimposed Digital (1200 Baud HART or 600 Baud FoxCom)	2

Pulse Output Signal[8]			
Off	0		
Internally Powered, on	1		
Externally Powered, on	2		
Electrical Classification[9]			
CSA, Ordinary Locations		K	
CSA, Class I, Div 2; Class II, Div 2; Class III, Div 2		L	
FM Ordinary Locations		M	
FM, Nonincendive, Class I, II, and III, Div 2		N	
No certification required		Z	
Optional Selections			
I/O Access Port			-A
Display/Keypad Protective Cover			-B
Terminal Block, 90 deg. Insertion			-C
Cable glands (non-conduit applications) (Not for Elec. Class. -L or -N)			-G

Specify signal cable (Transmitter to Flowtube)

Specify length in Feet (P/N R0101ZS) or length in Meters (P/N B4017TE)

This product and its components are protected by one or more of the following U.S. patents: 5,773,723; 5,895,864 and others pending. Corresponding patents have been issued or are pending in other countries.

Notes

1 750 and 900 mm (30 and 36 in) also available. Refer to PSS 1-6B5 E for complete specifications.
2 At Reference Operating Conditions, System Performance of Combined Transmitter and Flowtube.
3 Foxboro offers several other materials for specific applications; pressure/temperature limits and corrosion resistance differ from those shown for ptfe: Polyurethane—available on 50 through 900 mm (2 through 36 in sizes). For best resistance to abrasion and wear caused by solid particles in the process. Neoprene—available on 350 through 900 mm (14 through 36 in) sizes.
4 Consult Foxboro for availability of other options
5 Sizes greater than 600 mm (24 in) consult Foxboro
6 The LCD Indicator has ambient temperature limits of -20 to +70°C (-4 to +158°F).
7 Internal versus external power can be changed in the field by switch selection.
8 Pulse output can be configured as either a scaled Pulse Output or a frequency Pulse Output.
9 Contact Foxboro for status of testing laboratory certifications or approvals.

I/A Series® Pulse DC Magnetic Flowmeters: 8000A Series Wafer Body, 9300A, 9200A, 9100A Series Flanged Body Flowtubes, and IMT25 Series Intelligent Magnetic Flow Transmitters

A Magnetic Flowmeter consisting of a flowtube, signal cable, and Transmitter measures flow rate of conductive liquids (usually water based) and transmits a proportional electrical signal.

Refer to Product Specifications sheet PSS 1-6F2 A (8000A Series), 1-6F4 A (9300A Series), 1-6F9A (9100A Series) 1-6F10A (9200A Series), 1-6F5 A (IMT25) for complete description and specifications.

- 8000A – Wafer Design Flowtubes
  - ✔ *Available in 15 to 150 mm (1/16 to 6 in.) sizes*
  - ✔ *Ceramic and Retained PFA liner options*
  - ✔ *Sanitary design 25 to 80 mm (1/2 to 3 in.)*
- 9300A – Compact Lay Length Flanged Design Flowtubes
  - ✔ *Available in 25 to 400 mm (1/2 to 16 in.) sizes*
  - ✔ *PTFE or PFA Liner*
  - ✔ *Meets ISO/CD Standard 13359*
- I/A Series Intelligent Transmitter (IMT25)
  - ✔ *Digital, analog, pulse output signals*
  - ✔ *Relay outputs for alarms (IMT25 only)*
- Remote Communications
  - ✔ *Transmitters can be interrogated or configured via Hand-Held Terminal, PC, or I/A Series Workstation*
- 9200A – Large Flanged Flowtubes for General Process Industries
  - ✔ *Available in 15 to 2000 mm (1/2–78 in.)*
  - ✔ *Neoprene, EPDM, PTFE, Ebonite and Linatex Liners*
  - ✔ *Built in grounding (reference) electrodes standard, no need for grounding rings*
  - ✔ *Meets ISO lengths for applicable sizes*
- 9100A – Flanged Flowtubes for the Municipal Water and Water & Waste
  - ✔ *Available in 25 to 2000 mm (1-78 in.)*
  - ✔ *Ebonite liner*
  - ✔ *Available with Din, ANSI, AWWA flanges*

Functional Specifications

Minimum Conductivity of Process Fluid: 5 µhm/cm (5µS/cm)

Ambient Temperature Limits:
8000A/9300A: -40 and 70°C (-40 and 158°F)
IMT25: -30 and 70°C (-22 and 158°F)

Process Temperature Limits(Remote Mounted Transmitter):
8000A (Ceramic): -40 and 204°C (-40 and 400°F).
Maximum allowable step change in temperature is an increase of 125°C (225°F) and a decrease of 75°C (135°F)
8000A/9300A (PFA): -40 and 180°C (-40 and 250°F)
1/2″ - 6″, 8″ - 12″

Process Temperature Limits:
8000A (Ceramic): Full vacuum and 740 psi @ 100°F
(1/16 to 2 in.) Full vacuum and 675 psi @ 100°F (3 to 6 in.)
8000A/9300A (PFA): Full vacuum and 740 psi @ 100°F
For 9300A PTFE and Polyurethane refer to PSS 1-6F4 A

Process Temperature Limits:
9200A: -20 and 180°C (-4 and +356°F) with
ptfe Liner: -20 and +100°C (-4 and +212°F) with
EPDM[(a)] Liner: -10 and +70°C (14 and 158°F) with
Neoprene Liner: 0 and 70°C (32 and 158°F) with
Ebonite Liner: 0 and +70°C (32 and 158°F) with
Linatex Rubber Liner: -40 and +70°C (-40 and +158°F)

Process Pressure Limits:
9200A with ptfe Liner: Limits are No Vacuum and Flange Rating; but not exceeding 40 bar guage (580psig)
with EPDM, Neoprene, Ebonite, or Linatex Liner:
Full Vacuum and Flange Rating

Process Temperature Limits:
9100A Ebonite liner: 0 and 70° (32 and 158°F)

Process Pressure Limits:
9100A with Ebonite Liner:
Full Vacuum and Flange Rating

Flow Rates: Size mm	in	Flow Units	8000A	Minimum & Maximum Upper Range Values 9300A, 9200A, 9100A
1.6	1/16	Lpm gpm	0.11 and 1.1 0.03 and 0.3	
3	1/8	Lpm gpm	0.26 and 4.92 0.07 and 1.3	
6	1/4	Lpm gpm	0.68 and 13.6 0.18 and 3.6	
15	1/2	Lpm gpm	3.8 and 76 1 and 20	3.8 and 76 1 and 20
25	1	Lpm gpm	13.2 and 265 3.5 and 70	13.2 and 265 3.5 and 70
40	1-1/2	Lpm gpm	34.1 and 644 9.0 and 170	34.1 and 644 9.0 and 170

50	2	Lpm	49 and 946	49 and 946
		gpm	13 and 250	13 and 250
80	3	Lpm	117 and 2366	117 and 2366
		gpm	31 and 625	31 and 625
100	4	Lpm	208 and 4164	208 and 4164
		gpm	55 and 1100	55 and 1100
150	6	Lpm	426 and 9236	426 and 9236
		gpm	122 and 2440	122 and 2440
200	8	Lpm		965 and 19303
		gpm		255 and 5100
250	10	Lpm		1552 and 31037
		gpm		410 and 8200
300	12	Lpm		2215 and 44285
		gpm		585 and 11700
350	14	Lpm		2763 and 55260
		gpm		730 and 14600
400	16	Lpm		3634 and 72670
		gpm		960 and 19200
450	18	Lpm		4668 and 93350
		gpm		1200 and 24000
500	20	Lpm		5668 and 113400
		gpm		1500 and 30000
600	24	Lpm		8168 and 163400
		gpm		2150 and 43000
700	28	Lpm		11500 and 230000
		gpm		3000 and 60000
	30	Lpm		--
		gpm		3400 and 68000
800	32	Lpm		15000 and 300000
		gpm		3900 and 78000
900	36	Lpm		19170 and 383400
		gpm		5000 and 100000
1000	40	Lpm		23340 and 466800
		gpm		6200 and 124000
	42	Lpm		--
		gpm		6800 and 136000
	44	Lpm		--
		gpm		7500 and 150000
1200	48	Lpm		34170 and 683500
		gpm		9000 and 180000
1400	54	Lpm		46680 and 933500
		gpm		12000 and 240000
	60	Lpm		--
		gpm		14000 and 280000
1600	66	Lpm		66680 and 133400
		gpm		175000 and 350000
1800	72	Lpm		80020 and 1600000
			gpm	21000 and 420000
2000	78	Lpm		93350 and 1867000
		gpm		25000 and 500000

Performance Specifications

Accuracy - Pulse and Digital Output:

8000A	9300A	System Accuracy
1/2 - 6 in (15 - 150mm)	1/2 - 6 in (25 - 150 mm)	±0.25% of Reading ±0.005 ft/s (±0.0015 m/s)
1/16 - 1/4 in (1.16 - 6 mm)	8 - 16 in (200 - 400 mm)	±0.50% of Reading ±0.010 ft/s (±0.00305 m/s)

IMT 25 Transmitters:

Electrical Outputs:
4 to 20 mA current, digital, pulse
2 relays outputs for alarms (IMT25 only)

Electrical Classification: FM, CSA, CENELEC certified versions available for ordinary location and hazardous locations. Refer to Foxboro for complete specifications and availability

Display Options: 32 alphanumeric character, 2-line, back-lighted LCD display. Indicate ± total, net total, net inventory total & ±mn; rate in desired engineering units.

Optional Features

Grounding (Protective) Rings: Two grounding (protective) rings are required, one on each end of flowube, if mating piping is nonmetallic or lined metallic piping.

Signal Cable: Part Number R0101ZS (if ordered feet) or Part Number B4017TE (if ordered in meters). Maximum length 300 m (1000 ft).

Physical Specifications

Enclosure Classification: Meets the requirements of IEC IP66 and provides the environmental protection of NEMA Type 4X

Enclosure Finish: High-build epoxy paint

Lining Material:
Ceramic: 1.6 to 150 mm (1/16 to 6 in) sizes.
PTFE: 15 to 600 mm (1/2 to 16 in) sizes.
PFA: 15 to 400 mm (1/2 to 16 in) sizes.
Poly: 200 to 400 mm (8 to 16 in) sizes

Electrode Material: Platinum and Tantalum for ceramic flowtubes. Assorted materials for PTFE and PFA flowtubes

Mounting:
Flowtube: By process connection flanges. See How to Order.
Transmitters:
Pipe: Bracket for mounting to DN 50 or 2 in pipe.
Surface: Plate permits mounting to surface such as a wall.
Flowtube: Bolted directly to any 15 to 400 mm (1/2 to 16 in) 8000A and 9300 Series Flowtube (except sanitary)

How to Order

8000A Series Flowtube
Specify 8000A Series Flowtube:

Model Number	
1.6 mm (1/16 in) Line Size (ceramic liner only)	801SA
3 mm (1/8 in) Line Size (ceramic liner only)	801EA
6 mm (1/4 in) Line Size (ceramic liner only)	801QA
15 mm (1/2 in) Line Size	800HA
25 mm (1 in) Line Size	8001A
40 mm (1 1/2 in) Line Size	801HA
50 mm (2 in) Line Size	8002A
80 mm (3 in) Line Size	8003A
100 mm (4 in) Line Size	8004A
150 mm (6 in) Line Size	8006A
Tube Construction/End Connection	
Wafer Body (Mounts between ANSI Class 150 or 300, or Metric PN 10 or PN 16 Flanges)	W
Lining Material	
Ceramic	C
PFA (800HA to 8006A only)	P
Transmitter Mounting	
Remote (Pipe or Surface) Mounting	R
Flowtube Mounting (800HA to 8006A) to IMT25	I
Electrodes	
Tantalum (801SA to 801QA only) ceramic lined or Tantulam-Tungsten (800HA to 8006A) PFA lined	B
Conical 316 ss (8001A to 8006A) PFA lined only	C
Hastelloy C (800HA to 8006A) PFA lined only	H
Conical Hastelloy C (8001A to 8006A) PFA lined only	K
Platinum (801SA to 8006A) ceramic lined or platinum-iridium (800HA to 8006A) PFA lined	P
316 ss (800HA to 8006A) PFA lined only	S
Titanium (800HA to 8006A) PFA lined only	T
Coil Drive/Supply	
Pulsed dc (From Intelligent I/A Series Magnetic Flow Transmitters)	J
Housing Construction	
NEMA 4X Enclosure	G
Accidental Submergence (Remote Mounted Transmitter Only)	H
Electrical Certification	
CSA, Ordinary Locations	CGZ
CSA, Class 1, Division 2 Locations	CNZ
European, non-sparking	KNZ
FM, Ordinary Locations	FGZ
FM, n, i a Connections	FNA
No Certification	ZZZ
Optional Selection(s)	
Mounting Hardware for ANSI Class 150 Flanges	A
Mounting Hardware for ANSI Class 300 Flanges	B
Mounting Hardware Metric PN 10 Flanges	C
Mounting Hardware Metric PN 16 Flanges	D
Cable Glands (non-conduit applications)	G

9300A Series Flowtube
Specify 9300A Series Flowtube Model Number

Nominal Flowtube Size								
15 mm (1/2 in)[1]	930HA							
25 mm (1 in)	9301A							
40 mm (1 1/2 in)	931HA							
50 mm (2 in)	9302A							
80 mm (3 in)	9303A							
100 mm (4 in)	9304A							
150 mm (6 in)	9306A							
Tube Construction								
AISI Type 304 ss or 305 ss flowtube; Face-to-Face dimensions conform to ISO/DIS 13359		-SI						
End Connections								
ANSI Class 150, Carbon Steel flange			BA					
ANSI Class 150, 316 ss flange			BB					
ANSI Class 300, Carbon Steel flange[2]			BD					
ANSI Class 300, 316 ss flange[2]			BC					
Metric PN 10, Carbon Steel flange			ZD					
Metric PN 16, Carbon Steel flange			ZE					
Metric PN 25, Carbon Steel flange[2]			ZF					
Metric PN 40, Carbon Steel flange[2]			ZG					
Metric PN 10, 316 ss flange			ZL					
Metric PN 16, 316 ss flange			ZM					
Metric PN 25, 316 ss flange[2]			ZN					
Metric PN 40, 316 ss flange[2]			ZP					
Lining Material								
ptfe (Polytetrafluoroethylene)				-T				
pfa (Perfluoroalkoxy) (9301A to 9306A only)				-P				
Electrodes								
Tantalum-Tungsten					B			
Hastelloy C					H			
Conical Hastelloy C (9301A to 9306A only)					K			
Platinum-Iridium					P			
316L ss					S			
Conical 316L ss (9301A to 9306A only)					C			
Titanium					T			
Coil Drive/Supply								
Pulsed dc						J		
Housing/Transmitter Mounting								
NEMA 4 (ptfe)/NEMA 4X (pfa), Remote mounted transmitter							-G	
Total/accidental submergence (Remote mounted transmitter)[3]							-N	
NEMA 4 (ptfe)/NEMA 4X (pfa), IMT25 or IMT25L Integrally mounted							-I	
Electrical Classification								
CSA, Ordinary location								K
CSA, Class I, Div. 2[4]								L
FM, Ordinary location								M
CENELEC, e, ia (environment and pipeline Zone 1)								S
FM, Class I, Div. 2, Nonincendive[4]								N
European, nonincendive, Zone 2								U
No certification								Z
Options								
Heyco Glands (not available with Housing -T or -I)[5, 6]								-G
Teflon lining protector[7]								-T

Specify:
- **Flow range (normal and maximum)**
- **Liquid composition**
- **Liquid conductivity**
- **Operating temperature (normal and maximum)**
- **Operating pressure (normal and maximum)**

Specify other Optional Features

Specify information for instrument tag

Notes
1 Available with -T (ptfe) lining only
2 Available with -P (pfa) lining only
3 Sealed for accidental or continuous operation under water up to 9 m (30 ft) deep. Supplied with kit for sealing
4 Must be used with transmitter certified for Class I, Groups B, C, and D, Division 2 locations
5 For flowtubes with integrally mounted transmitter, cable glands may be specified with the transmitter options
6 Cable glands are assembled to flowtube junction box and are specified for nonconduit applications. (not for Electrical Classification Code L & N)
7 Not available with Metric Flange Connections ZD & ZE

9300A Series Flowtube
Specify 9300A Series Flowtube Model Number

Nominal Flowtube Size					
200 mm (8 in)	9308A				
250 mm (10 in)	9310A				
300 mm (12 in)	9312A				
450 mm (14 in)	9314A				
400 mm (16 in)	9316A				
Tube Construction					
AISI Type 304 ss;					
Face-to-Face dimensions conform to to ISO/DIS 13359		-SI			
End Connections					
ANSI Class 150, Carbon Steel flange			BA		
ANSI Class 150, 316 ss flange			BB		
ANSI Class 300, Carbon Steel flange(8)			BD		
ANSI Class 300, 316 ss flange(8)			BC		
Metric PN 10, Carbon Steel flange			ZD		
Metric PN 16, Carbon Steel flange			ZE		
Metric PN 25, Carbon Steel flange(8, 9)			ZF		
Metric PN 40, Carbon Steel flange(8, 9)			ZG		
Metric PN 10, 316 ss flange(2)			ZL		
Metric PN 16, 316 ss flange(2)			ZM		
Metric PN 25, 316 ss flange(8, 9)			ZN		
Metric PN 40, 316 ss flange(8, 9)			ZP		
Lining Material					
Polyurethane				-A	
pfa (Perfluoroalkoxy) (8 inch,10 inch, 12 inch)				-P	
ptfe (Polytetrafluoroethylene)				-T	
Electrodes					
Tantalum-Tungsten(10)					B
Hastelloy C(10)					H
Conical Hastelloy C (9301A to 9306A only)(10)					K
Platinum-Iridium(10)					P
316L ss					S
Conical 316L ss (9301A to 9306A only)(10)					C
Titanium(10)					T

Coil Drive/Supply

Pulsed dc	J			

Housing/Transmitter Mounting

NEMA 4X, Remote mounted transmitter		-G		
Total/accidental submergence (Remote mounted transmitter)11		-N		
NEMA 4X, Integrally mounted IMT25 and IMT25L		-I		

Electrical Safety

CSA, Ordinary location			K	
CSA, Class I, Div. 212			L	
FM, Ordinary location			M	
FM, Class I, Div. 2, Nonincendive12			N	
European, nonincendive, Zone 2			U	
No certification			Z	

Options

Cable glands (not with -T or -I housing)13				-G
Grounding Electrodes10				-E
Lining protector (8 inch, 10 inch, 12 inch, 14 inch, 16 inch)9,10				-T

Specify:

- **Flow range (normal and maximum)**
- **Liquid composition**
- **Liquid conductivity**
- **Operating temperature (normal and maximum)**
- **Operating pressure (normal and maximum)**

Specify other Optional Features

Specify information for instrument tag

Notes

8 Available with -P (pfa) lining only
9 The -T option not available with metric End Connection Options
10 Available with pfa (-P lining) and ptfe (-T lining) only
11 Sealed for accidental or continuous operation under water up to 9 m (30 ft) deep. Supplied with kit for sealing
12 Must be used with transmitter certified for Class I, Groups B, C, and D, Division 2 locations
13 The cable glands provide a sealed cable entry for field wiring to the flowtube junction box, and are generally specified in non-conduit applications (not for Electrical Classification Codes L or N). For flowtubes with integrally mounted transmitters (-I or -T housing) cable glands may be specified with the transmitter options

9100A Series Magnetic Flowtubes
Specify 9100A Series Magnetic Flowtube Model Number
Nominal Flowtube Size (a)

DN Flange Size	Inch Flange Size	Model
25 mm	1 in	9101A
40 mm	1 1/2 in	911HA
50 mm	2 in	9102A
65 mm	2 1/2 in	912HA
80 mm	3 in	9103A
100 mm	4 in	9104A
125 mm	5 in	9105A
150 mm	6 in	9106A
200 mm	8 in	9108A
250 mm	10 in	9110A
300 mm	12 in	9112A
350 mm	14 in	9114A
400 mm	16 in	9116A
450 mm	18 in	9118A

DN Flange Size	Inch Flange Size	Model
500 mm	20 in	9120A
600 mm	24 in	9124A
700 mm	28 in	9128A
-	30 in	9130A
800 mm	32 in	9132A
900 mm	36 in	9136A
1000 mm	40 in	9140A
1050 mm	42 in	9142A
1100 mm	44 in	9144A
1200 mm	48 in	9148A
1400 mm	54 in	9154A
1500 mm	60 in	9160A
1600 mm	66 in	9166A
1800 mm	72 in	9172A
2000 mm	78 in	9178A

Tube Construction						
AISI Type 304 Stainless Steel Tube (304 ss)	-SI					
End Connections						
ANSI Class 150, Carbon Steel Flange – 1 to 24 in Line Sizes		CA				
AWWA C-207, Class D, Carbon Steel Flange – 28 to 78 in Line Sizes		WC				
PN 6, EN 1092-1, Carbon Steel Flange – 1400 to 2000 mm Line Sizes		CZ				
PN10, EN 1092-1, Carbon Steel Flange – 200 to 2000 mm Line Sizes		CX				
PN 16, EN 1092-1, Carbon Steel Flange – 65 to 2000 mm Line Sizes		CE or CF[b]				
PN 40, EN 1092-1, Carbon Steel Flange – 25 to 50 mm Line Sizes		CG				
Liner Material						
Ebonite			B			
Electrodes						
Hastelloy C-276				H		
Coil Drive						
Pulsed dc					J	
Housing Construction/Transmitter Mounting						
Coated Carbon Steel Housing with Aluminum Terminal Box - Terminal Box has 1/2 inch Conduit Threads - Remote Mounted Transmitter						-G
Coated Carbon Steel Housing with Polyamide Terminal Box - Terminal Box has 1/2 inch NPT Conduit Threads with Cable Glands - Remote Mounted Transmitter						-F
Coated Carbon Steel Housing with Polyamide Terminal Box, M20 Conduit						-V
Electrial Safety (Also see Electrical Safety Specifications section)						
FM/CSA, Nonincendive Class 1, Div 2						N

(a) See "End Connection" selections further in Code to determine ANSI, AWWA, and BS (DIN) flanges applicable to each flowtube size.
(b) For PED, please contact Invensys Foxboro.

Example: 9116A-CA-BHJ-GN

9200A Series Magnetic Flowtubes

Specify 9200A Series Magnetic Flowtube Model Number

Nominal Flowtube Size[a]

DN Flange Size	Inch Flange Size	Model
15 mm	1/2 in	920HA
25 mm	1 in	9201A
40 mm	1-1/2 in	921HA
50 mm	2 in	9202A
65 mm	2-1/2 in	922HA
80 mm	3 in	9203A
100 mm	4 in	9204A
125 mm	5 in	9205A
150 mm	6 in	9206A
200 mm	8 in	9208A
250 mm	10 in	9210A
300 mm	12 in	9212A
350 mm	14 in	9214A
400 mm	16 in	9216A
450 mm	18 in	9218A

DN Flange Size	Inch Flange Size	Model
500 mm	20 in	9220A
600 mm	24 in	9224A
700 mm	28 in	9228A
750 mm	30 in	9230A
800 mm	32 in	9232A
900 mm	36 in	9236A
1000 mm	40 in	9240A
1050 mm	42 in	9242A
1100 mm	44 in	9244A
1200 mm	48 in	9248A
1400 mm	54 in	9254A
1500 mm	60 in	9260A
1600 mm	66 in	9266A
1800 mm	72 in	9272A
2000 mm	78 in	9278A

Tube Construction

AISI Type 304 Stainless Steel Tube (304 ss . . . . . -SI

End Connections

ANSI Class 150, Carbon Steel Flange – 1/2 to 24 in Line Sizes. . . . . CA
ANSI Class 150, Stainless Steel Flange – 1/2 to 24 in Line Sizes. . . . . CB
ANSI Class 300, Carbon Steel Flange – 1/2 to 24 in Line Sizes. . . . . CD
AS4087, Class 16, Carbon Steel Flange – 15 to 1200 mm. A2
AS4087, Class 21, Carbon Steel Flange – 15 to 1200 mm. A3
AS4087, Class 35, Carbon Steel Flange – 15 to 1200 mm. A4
AWWA C-207, Class D Carbon Steel Flange – 28 to 78 in Line Sizes . . . . . WC
AS 2129, Table E, Carbon Steel Flange – 15 to 1200 mm Line Sizes. A1
EN 1092-1, PN 6, Carbon Steel Flange – 65 to 2000 mm Line Sizes . . . . . CZ
EN 1092-1, PN 6, Stainless Steel Flange – 65 to 600 mm Line Sizes. . . . . CY
EN 1092-1, PN 10, Carbon Steel Flange – 200 to 2000 mm Line Sizes. CX
EN 1092-1, PN 10, Stainless Steel Flange – 200 to 600 mm Line Sizes CV
EN 1092-1, PN 16, Carbon Steel Flange – 65 to 1200 mm Line Sizes . . . . . CE or CF[b]
EN 1092-1, PN 16, Stainless Steel Flange – 65 to 600 mm Line Sizes . . . . . CM
EN 1092-1, PN 25, Carbon Steel Flange – 200 to 600 mm Line Sizes . . . . . CN
EN 1092-1, PN 25, Stainless Steel Flange - 200 to 600 mm. . . . . CP
EN 1092-1, PN 40, Carbon Steel Flange – 15 to 600 mm Line Sizes . . . . . CG

9200A Series Magnetic Flowtubes (Continued)

Liner Material

Neoprene	-N				
EPDM (an Ethylene Propylene Terpolymer)	-E				
ptfe – 100˚C (212˚F) Limit	-T				
Ebonite -B					
Linatex -L					

(a) See "End Connection" selections further in Code for ANSI, AWWA, AS, and DIN flanges applicable to each flowtube size.
(b) For PED, please contact Invensys Foxboro.

Electrodes(a)

AISI Type 316Ti Stainless Steel (316Ti ss)		S			
Hastelloy C-276		H			
Platinum-Iridium		P			
Titanium T					
Tantalum		B			

Coil Drive

Pulsed dc			J		

Housing Construction/Transmitter Mounting

Coated Carbon Steel Housing with Aluminum Terminal Box				-G	
- Terminal Box has 1/2 inch Conduit Threads					
- Remote Mounted Transmitter					
Polyamide terminal box with 1/2 inch NPT conduit				-F	
Polyamide terminal box with 1/2 inch M20 conduit				-V	

Electrial Safety (Also see Electrical Safety Specifications section)

FM/CSA, Nonincendive, Class 1, Division 2					N

Example: 9216A-SICA-NSJ-GM

(a) Fluid reference electrode included, except for flowtubes with a ptfe liner.

IMT25 Transmitter
Specify IMT25 Transmitter Model Number

Transmitter Housing

Pipe Mounting			-P		
Surface Mounting			-S		
Flowtube Mounting(14,15)			-I		

Language

English Only (Available only with HART Protocol Selection "T")				E	

Nominal Supply Voltage and Frequency

85 to 264 V ac, 47 to 63 Hz					A
24 V dc(16)					B

Digital Communications Protocol					
FOUNDATION Fieldbus H	F				
Digital HART Protocol	T				
Integral Display/Keypad					
No Display/Keypad		A			
Wide Angle LCD Display/Keypad(16)		B			
Transmission Output Signal(17)					
Internally Powered, 4-20 mA and Superimposed Digital (1200 Baud HART)			1		
Externally Powered, 4-20 mA and Superimposed Digital (1200 Baud HART)			2		
Pulse Output Signal (Field Selectable)(17, 18)					
Off				0	
On, Internally powered				1	
On, Externally powered				2	
Electrical Classification(19)					
CSA, ordinary locations					K
CSA, Class 1, Division 2, Class II, Division 2; Class III, Division 2					L
FM, ordinary location					M
FM, Class 1, Division 2					N
European Zone 2, Intrinsically Safe, ib Connection(20)					S
European, Zone 2, Nonincendive, Ex N					U
No Certification required					Z
Optional Selections					
I/O Access Port					A
Display/Keypad Protective Cover					B
Dual compartment enclosure with top insertion terminal block					C
Dual compartment enclosure with lug type terminal block					D
Cable glands (non-conduit applications) (Not for Elec. Class -L or -N)					G

Specify signal cable (part number R0101ZS) length, transmitter to flowtube (part number R0101ZS for feet, or part number B4017TE for meters)

Specify other Optional Features

Specify information for instrument tag

Notes

14 Flowtube mounted transmitter may only be used with process temperatures not exceeding 120°C (250°F)
15 IMT25 can only be integrally mounted to 8000A and 9300A Series Flowtubes
16 The 24 V dc selection requires greater than 1.5 amperes
17 Internal versus external power can be changed in field by switch selection
18 Pulse output can be configured as scaled or frequency pulse
19 These transmitters have been designed to meet the specified electrical safety descriptions. For status of testing laboratory approvals or certifications, contact Foxboro. Also see "Electrical Safety Specifications" section
20 Not available with the "-I" Flowtube Mounting selection

This product and its components are protected by one of the following U.S. patents: 4,773,275; 5,224,394; 5,773,723; 5,895,864 and others pending.

Model MAG2IC Intelligent Magnetic Flowmeter with Integrally Mounted Transmitter, Model MAG2RT Remote Mounted Intelligent Transmitter, and Model MAG2RS Remote Mounted Flowtube

The Foxboro brand M4G2 Series Flowmeters are high performance, intelligent Magnetic Flowmeters based on field proven two-wire, loop powered technology. They offer the stable and accurate measurement of a traditional magnetic flowmeter with low power consumption, resulting in a lower overall cost of ownership. The flowmeters are provided in an integrally mounted transmitter configuration, or with a remote transmitter and flowtube with an interconnecting cable.

- Field proven, loop powered, 2-wire operation
- High accuracy to ±0.5% of rate
- Minimum measurable fluid conductivity down to 10 µS/cm
- Suitable for use in numerous process fluid measurement industries
- Electrode status diagnostic (determines empty pipe detection, or scaling on electrode)
- Adjustable low flow cutoff
- 4 to 20 mA dc Analog Output with HART Communications
- Approved/Certified by many agencies for use in hazardous area locations
- Enclosure meets IEC IP67 and NEMA 4X ratings
- FlowEXpertPro™ sizing program; see next page
- Flanged body flowtubes are offered in 2.5 to 200 mm (0.1 to 8 in) line sizes when integrally mounted, and in 10 to 200 mm (1 to 4 in) line sizes when remote mounted
- Wafer body flowtubes are offered in 25 to 100 mm (1 to 4 in) line sizes when either integrally or remote mounted
- Flowtubes used with ANSI Class l50 or 300 flanges, or DN PN10, PN16, or PN25 flanges
- Standard mounting brackets and hardware for surface or pipe mounting of the remote transmitter
- Interconnecting cable for remote configurations offered in numerous lengths up to 70 m (233 ft), depending on line size

Functional Specifications

High Accuracy and Stable Output: MAG2 provides a high accuracy of ±0.5% of rate

Minimum Measurable Fluid Conductivity: MAG2 offers a minimum process fluid conductuctivity of 10 µS/cm, which is excellent when compared to other 2-wire magnetic flowmeters, thereby maximizing applicability.

Low Flow Cutoff, Dropout, and Empty Pipe Detection: Refer to the Functional Specifications section for a description of these flow features.

Flanged or Wafer Body Flowtube with Integral or Remote Mounted Transmitter: The MAG2 Series are offered as flanged or wafer body flowtubes with either an integrally or remote mounted transmitter. This provides the user with the flexibility required to satisfy different installation configurations.

Communications: 4 to 20 mA with HART communications. Allows direct analog connection to common receivers while also providing remote control and configuration capability with a HART Communicator or a host configurator.

Performance Specifications

Lightning Protection: Equipped with a lightning arrester in the power source and external output terminals; it can withstand a transient surge of 12 kV, 1000 A without permanent damage.

Power Failure: An EEPROM retains data record of totalized value when pulse output is used (retention period approximately 10 years).

Measurable Electrical Conductivity:

Integral Transmitter Versions: 10 µS/cm, or greater

Remote Transmitter Versions

- Nominal Line Sizes 10 and 15 mm (3/8 and 1/2 in), 50 µS, or greater
- Nominal Line Sizes 25 to 200 mm (1 to 8 in), 10 µS, or greater

Large Selection of Flowtube Sizes:

Model MAG2IC (with Integral Transmitter)

- Flanged Body: 2.5 to 200 mm (0.1 to 8 in) line sizes
- Wafer Body: 25 to 100 mm (1 to 4 in) line sizes

Flange Ratings

- ANSI Class 150 or 300
- DIN PN10, PN16, or PN25

Wide Variety of Applications:

- Corrosive liquid measurement
- Chemical solution measurement
- Drainage/waste disposal fluid measurement
- Drinking water and waste water service
- Industrialaagricultural water measurement
- Seawater measurement

Physical Specifications

Size:
Wafer Body
25, 40, 50, 65, 80, and 100 mm
(1, 1½, 2, 2½, 3, and 4 in)
Flanged Body
2.5, 5,10, 15, 25, 40, 50, 65, 80, 103, 150, and 200 mm
(⅜, ½, 1, 1½, 2, 2½, 3, 4, 6, and 8 in)
NOTE: The 2.5 and 5 mm (0.1 and 0.2 in) Flanged Body Tubes are available with the Model MAG2IC flowmeter only.

Flange Rating:
ANSI Class 150 or 300
DIN PN10, PN16, or PN25

Enclosure Rating: Enclosure has the dusttight and immersion protecton rating of IP67 as defined by IEC 60529, and provides the environmental and corrosion resistant protection rating of NEMA 4X.

Transmitter Enclosure Material: Low copper, aluminum alloy

Transmitter Enclosure Finish:
Standard – baked acrylic paint
Corrosion resistant – baked epoxy paint

Terminal Box Material (Model MAG2RS only):
Low copper, aluminum alloy

Terminal Box Finish (Model MAG2RS only):
Standard – baked acrylic paint
Corrosion resistant – baked epoxy paint

Display Cover Material: Tempered glass

Flowtube Body Materials:
Case material
Sizes 2.5 to 15 mm (0.1 to ½ in): CF8M
Sizes 25 to 200 mm (1 to 8 in): 304 ss
Measuring pipe material – 304 ss

Flange Material:
Sizes 2.5 to 65 mm (0.1 to 2½ in) – 304 ss
Sizes 80 to 200 mm (3 to 8 in) – carbon steel with a corrosion resistant paint

Process Wetted Materials:
Lining – PFA
Electrodes – 316L ss, ASTM B574 (Hastelloy C-276 equivalent), Titanium, Tantalum, Nickel (except with Line Size Codes 002, 005, and 010), Zirconium, or Platinum
Grounding rings – 316 ss, ASTM B575 (Hastelloy C-276 equivalent), Titanium, Tantalum, Zirconium, or Platinum

Dimensions — Nominal: see DIMENSIONS-NOMINAL section

Approximate Weight — Model MAG2RT (Remote Mounted Transmitter): 2.8 kg (6.2 lb)

Model MAG2IC – Magnetic Flowmeter with Integrally Mounted Magnetic Flow Transmitter

How to Order–Specify model number MAG2IC followed by order code for each selection

Nominal Line Size			
2.5 mm (0.1 in) (Flanged Body only)[a]	-002		
5 mm (0.2 in) (Flanged Body only)[a]	-005		
10 mm (⅜ in) (Flanged Body only)[a]	-010		
15 mm (½ in) (Flanged Body only)[a]	-015		
25 mm (1 in) (Flanged and Wafer Body)	-025		
40 mm (1½ in) (Flanged and Wafer Body)	-040		
50 mm (2 in) (Flanged and Wafer Body)	-050		
65 mm (2½ in) (Flanged and Wafer Body)	-065		
80 mm (3 in) (Flanged and Wafer Body)	-080		
100 mm (4 in) (Flanged and Wafer Body)	-100		
150 mm (6 in) (Flanged Body only)	-150		
200 mm (8 in) (Flanged Body only)	-200		
Flowtube Lining Material			
PFA		P	
End Connection and Flange Rating			
Wafer Body, ANSI Class 150			21
Wafer Body, ANSI Class 300			22
Wafer Body, DIN PN10			41
Wafer Body, DIN PN16			42
Wafer Body, DIN PN25			43
Flanged Body, ANSI Class 150			A1
Flanged Body, ANSI Class 300			A2
Flanged Body. DIN PN10			D1
Flanged Body, DIN PN16			D2
Flanged Body, DIN PN25			D3

Electrode Material											
316L ss	L										
Hastelloy C-276	C										
Titanium	K										
Zirconium	H										
Tantalum	T										
Nickel	N										
Platinum-Iridium	P										
Earthing (Grounding) Ring											
316 ss		S									
Hastelloy C-276		C									
Titanium		K									
Zirconium		H									
Tantalum		T									
Platinum		P									
Wiring Connection (Transmitter Enclosure)											
G ½ Internal Thread – without Watertight Gland			A								
G ½ Internal Thread – with one Plastic Watertight Gland			B								
G ½ Internal Thread – with one brass Ni-Plated Watertight Gland			C								
½ NPT Internal Thread – without Watertight Gland[b]			D								
M20 Internal Thread – without Watertight Gland			E								
G ½ Internal Thread – with two Plastic Watertight Glands			J								
G ½ Internal Thread – with two Brass Ni-Plated Watertight Glands			K								
Face to Face Dimension											
Standard				A							
Installation/Display Direction (Refer to Figure 7 below)											
Horizontal Piping – Right Side viewed from Upstream					A						
Horizontal Piping – Left Side viewed from Upstream					B						
Horizontal Piping – Downstream Side					C						
Horizontal Piping – Upstream Side					D						
Vertical Piping Mounting – Right Side of Piping – Flow Direction: Upward					E						
Vertical Piping Mounting – Left Side of Piping – Flow Direction: Upward					F						
Calibration											
Standard Calibration (3 points: 0%, 50%, and 100%)						A					
Output Signal											
4 to 20 mA dc Analog Output with HART Communications[c]							T				
Electrical Safety (also see Electrical Safety Specifications section for further Information)											
No Approvals or Certifications								X			
FM/CSA Approved/Certified Explosion proof, Class I, Division 1[b]								1			
FM/CSA Approved/Certified Nonincendive, Class I, Division 2[b]								2			
Finish/Paint											
Standard Paint									X		
Corrosion Resistant Paint									2		
Mounting Hardware											
None										X	
304 ss Bolts and Nuts (only for ANSI Class 150 and 300 Wafer Body Flowtubes)										2	
Optional Selections											
None (Required selection if options are not selected)											-X
With Tag Number Plate on the Transmitter Enclosure; maximum 20 characters											-K
With Tag Number Plate attached to Flowmeter with Wire											-L

Notes

a A 15 mm (0.5 in) flange is used for Nominal Line Size Codes -002 to -015.
b Wiring Connection Code D must be selected with Electrical Safety Code 1 or 2.
c Code T replaces Code H.

Model MAG2RT – Remote Mounted Magnetic Flow Transmitter

How to Order–Specify model number MAG2RT followed by order code for each selection

Output Signal				
4 to 20 mA dc Analog Output with HART Communications[a]	-T			
Wiring Connection (Transmitter Enclosure)				
G ½ Internal Thread – without Watertight Gland		A		
G ½ Internal Thread – with two Plastic Watertight Glands		B		
G ½ Internal Thread – with two brass Ni-Plated Watertight Glands		C		
½ NPT Internal Thread – without Watertight Gland		D		
M20 Internal Thread – without Watertight Gland		E		
Transmitter Mounting[b]				
Wall Mounting with Standard Surface Mounting Brackets			G	
Nominal DN 50 or 2 inch Pipe Mounting with Standard Bracket Set			H	
Electrical Safety (also see Electrical Safety Specifications section)				
No Approvals or Certifications				X
FM/CSA Approved/Certified Nonincendive, Class I, Division 2[c]				2
Optional Selections				
None				-X
With Tag Number Plate on the Transmitter Housing; maximum 20 characters				-K
Corrosion-Resistant Paint				-2

Notes

a Code -T replaces Code -H.
b Refer to DIMENSIONS-NOMINAL Section.
c Must select Wiring Connection D.

Model MAG2RS – Remote Mounted Magnetic Flowtube

How to Order–Specify model number MAG2RS followed by order code for each selection

Nominal Line Size						
10 mm (⅜ in) (Flanged Body only) – a 15 mm (0.5 in) Flange is used with this Line Size	-010					
15 mm (½ in) (Flanged Body only) – a 15 mm (0.5 in) Flange is used with this Line Size	-015					
25 mm (1 in) (Flanged and Wafer Body)	-025					
40 mm (1½ in) (Flanged and Wafer Body)	-040					
50 mm (2 in) (Flanged and Wafer Body)	-050					
65 mm (2½ in) (Flanged and Wafer Body)	-065					
80 mm (3 in) (Flanged and Wafer Body)	-080					
100 mm (4 in) (Flanged and Wafer Body)	-100					
150 mm (6 in)(Flanged Body only)	-150					
200 mm (8 in) (Flanged Body only)	-200					
Flowtube Lining Material						
PFA		P				
End Connection and Flange Rating						
Wafer Body, ANSI Class 150			21			
Wafer Body, ANSI Class 300			22			
Wafer Body, DIN PN10			41			
Wafer Body, DIN PN16			42			
Wafer Body, DIN PN25			43			
Flanged Body, ANSI Class 150			A1			
Flanged Body, ANSI Class 300			A2			
Flanged Body. DIN PN10			D1			
Flanged Body, DIN PN16			D2			
Flanged Body, DIN PN25			D3			
Electrode Material						
316L ss				L		
Hastelloy C-276				C		
Titanium				K		
Zirconium				H		
Tantalum				T		
Nickel				N		
Platinum-Iridium				P		
Earthing (Grounding) Ring						
316 ss					S	
Hastelloy C-276					C	
Titanium					K	
Zirconium					H	
Tantalum					T	
Platinum					P	
Wiring Connection (Flowtube Terminal Box)						
G ½ Internal Thread – without Watertight Gland						A
G ½ Internal Thread – with one Plastic Watertight Gland						B
G ½ Internal Thread – with one brass Ni-Plated Watertight Gland						C
½ NPT Internal Thread – without Watertight Gland[a]						D
M20 Internal Thread – without Watertight Gland						E
Face to Face Dimension						
Standard						A

Calibration					
Standard Calibration (3 points: 0%, 50%, and 100%)	A				
Electrical Safety (also see Electrical Safety Specifications section)					
No Approvals or Certifications		X			
FM/CSA Approved/Certified Nonincendive, Class I, Division 2[a]		2			
Optional Selections (Misc.)					
None (Required selection if options are not selected)			-X		
With Tag Number Plate on the Flowtube Terminal Box; maximum 16 characters			-K		
Corrosion-Resistant Paint			-2		
Attached 304 ss Bolts and Nuts for Installation; Wafer Body Flowtube only			-4		
Optional Cable Length Selection for Interconnecting Flowtube to Remote Transmitter					
None (make this selection if interconnecting cable is not desired)				-XX	
2 m (6.6 ft)				-02	
3 m (9.8 ft)				-03	
4 m (13.1 ft)				-04	
5 m (16.4 ft)				-05	
10 m (32.8 ft)				-10	
15 m (49.2 ft)				-15	
20 m (65.6 ft)				-20	
30 m (98.4 ft)				-30	
40 m (131.2 ft)				-40	
50 m (164.0 ft)				-50	
60 m (196.8 ft)				-60	
70 m (229.7 ft)				-70	
Optional Terminals for Flowtubes[b]					
Terminals for Flowtube and no Terminals on Transmitter					AX
No Terminals on Flowtube and with Terminals on Transmitter					XA
Terminals for both Flowlube and Transmitter					AA

Notes

a Wiring Connection Code D (½ NPT internal thread) must be selected with Electrical Safety Code 2.

b Select Optional Terminals only when an Optional Cable is selected.

I/A Series® IMTSIM™ Magnetic Flow Simulator

The IMTSIM product is a hand-held instrument used to verify the calibration and operations of IMT25 Magnetic Flow Transmitters in the field. The IMTSIM product produces an output signal similar to that of a 2800, 8300, 8000A, or 9300A Series Magnetic flowtube. This signal is used as an output to the transmitter being tested. Proper operation of the transmitter is determined by comparing the actual transmitter output created in response to the calibrated IMTSIM output signal.

Refer to Product Specification Sheet PSS 1-6F7A for complete descriptiion and specifications.

3

How to Order – Specify model number IMTSIM- followed by order code for selection

Version

Standard . . . . . -1

Cable/Connector

38-inch neoprene cable with four test probes having pin terminations 1

75RTA, 75LBA, and 75MCA Series FlowExpert™ Computing Totalizer/Batcher

These FlowExpert units provide for the following applications:

Model 75RTA Ratemeter/Totalizer for use where flow rate indication and total are required.

Model 75LBA Liquid Batcher for use where batching functions for liquids are required.

Model 75MCA Mass Computer for computation and display of flow rate and total flow of liquids, gases, and steam in mass engineering units.

Refer to Product Specifications sheet PSS 1-9B1 A (75RTA), PSS 1-9C1 A (75LBA), and PSS 1-9D1 A (75MCA) for complete description and specifications.

- 75RTA Performs Uncompensated rate/totalization
- 75LBA Compensates for Temperature Changes and has Built-in Batching Functions (Liquids Only)
- 75MCA Compensates for Temperature and/or Pressure Changes
- Panel or Field Mounted Versions
- Rates and Totals Displayed in any Desired Engineering Units
- Accepts Control Inputs to Allow Operation from Remote Locations
- Provides Analog Output, Totalizer Pulse Output, and Alarm Outputs
- Provides Relays Outputs (75LBA/75MCA Only)
- Accepts 120 VAC, 240 VAC, or 24 V DC Power

Physical Specifications

Panel Mounted Enclosure: Noryl enclosure with polyester front panel. The panel-mounted instrument can be mounted flush on a control rack or panel. Instrument front face is sealed to provide the environmental protection of NEMA Type 4X.

Field Mounted Enclosure: The panel mounted instrument is mounted flush in the door of a glass-filled polyester enclosure with a baked gray finish. The field-mounted enclosure may be mounted to a surface or to a nominal DN 50 or 2-in pipe. It meets the requirements of IEC IP65 and NEMA Type 4X.

Agency Approvals: The 75RTA, 75LBA, and 75MCA have been approved by CSA for use in general purpose (ordinary) locations.

Overall Dimensions:

Panel-Mounted Enclosure:
- Height–86 mm (3.4 in)
- Width–157 mm (6.2 in)
- Depth–117 mm (4.6 in)

Field-Mounted Enclosure:
- Height–290 mm (11.4 in)
- Width–238 mm (9.4 in)
- Depth–170 mm (6.7 in)

Approximate Mass:

Panel Mounted Unit: 0.8 kg (1.75 lb)
Field Mounted Unit: 4 kg (8.8 lb)

Functional Specifications

Inputs/Outputs:

Item	75RTA	75LBA	75MCA
Flow Imput	4-20 mA or 0-10 KHz Pulse	4-20 mA or 0-5 KHz Pulse	4-20 mA or 0-5 KHz Pulse
Temperature Input	None	4-wire Pt RTD or 4-20 mA	4-wire Pt RTD or 4-20mA
Pressure Input	None	None	4-20 mA
Contact Inputs	5	Up to 3	Up to 3
Analog Output	4-20 mA proportional to rate	4-20 mA proportional to rate, temperature or density	4-20 mA proportional to rate, temperature, pressure, or density
Totalizer Pulse	Selectable width and frequency coincident with least significant whole digit on totalizer		
Contact Alarm Outputs	2	3	3
Outputs	None	2 for batching using on/off valves	2 for alarms

Operating Conditions:

Influence	Normal Operating Condition Limits
Ambient Temperature	0 and 50°C (32 and 122°F)
Relative Humidity	0 and 85% Noncondensing
Supply Voltage (ac)	Rated Voltage +10% and -15%
Supply Frequency (ac)	Rated Frequency ±3 Hz
Supply Voltage (dc)	18 and 27 V dc
RFI Susceptibility	3 V/m from 27 to 1000 MHz
Vibration	Up to 200 Hz at an acceleration of 5 m/s^2 (1/2 "g")

How to Order—Specify model number 75 followed by order code for each selection

Instrument

Ratemeter/Totalizer	RTA
Liquid Batcher	LBA
Mass Computer	MCA

Enclosure

Panel Mounting	PD
Field Enclosure, Surface Mounting	FE
Field Enclosure, Pipe Mounting	FF

Language

English	E

Supply Voltage

120/240 V ac, 50/60 Hz; 24 V dc	F

Input Signal

75RTA

Pulse Primary flow Input Signal, 0 to 10 kHz	A
Analog Primary Flow Input Signal, 4 to 20 mA	B

75LBA

Pulse Primary flow Input Signal, 0 to 5 kHz	A
Analog Primary Flow Input Signal, 4 to 20 mA	B

75MCA

Pulse Primary flow Input Signal, 0 to 5 kHz,Liquid Applications	A
Analog Primary Flow Input Signal, 4 to 20 mA, Liquid Applications	B
Pulse Primary Flow Input Signal, 0 to 5kHz, Gas/Steam Applications	C
Analog Primary Flow Input Signal, 4 to 20 mA, Gas/Steam Applications	D

Specify information for instrument tag

Sanitary Magnetic Flowmeter: Model 4700S Ceramic or PFA-lined Sanitary Flowtube and Models 47 and 48 Transmitters

A Sanitary Magnetic Flowmeter consisting of a flowtube and transmitter measures the flow of conductive liquids (usually water based) and transmits a proportional electrical signal. Sanitary design, specifically suited for food, beverage and water applications.

Refer to Product Specifications Sheets PSS 1-6G2 A (4700S Series Flowtube) and PSS 1-6G1A (Model 47 and 48 Series Transmitter for complete description and specifications.

- 4700S Sanitary Flowtube
  - ✔ Available in 10 to 100 mm (1/2 to 4 in.) sizes
  - ✔ Ceramic and Retained PFA liner options
  - ✔ Wide choice of sanitary end connections
- Models 47 and 48 Transmitter
  - ✔ Digital, analog and pulse outputs
  - ✔ Automatically uploads data from flowtube for easy configuratio
  - ✔ Field changeable communications (Model 48 only)

Performance Specifications

Performance stated under Reference Operating Conditions and is for the Magnetic Flow System–Transmitter with Flowtube.

Accuracy—Digital and Pulse Outputs

Sanitary Flowtube Model and Liner Used	Magnetic Flow System Accuracy with:	
	Model 47 Transmitter	Model 48 Transmitter
4700S with Ceramic Liner	±0.5% of Flow Rate	±0.25% of Flow Ra† e
4700S with PFA Liner	±0.5% of Flow Rate	±0.50% of Flow Rate

Accuracy: 4 to 20 mA Output (or 0 to 20 mA)
Same as Digital/Pulse Output accuracy but add ± (0.1% of flow rate + 0.05% of Span)

Repeatability: ±0.1% of Flow Rate for velocities ≥0.5 m/s (1.6 ft/s)

Supply Voltage Effect: <0.005% of measured value for 1% voltage change

Ambient Temperature Effect:
Current Output: <±0.003%/°C
Pulse Frequency Output: <±0.003%/°C

Model 47/48–*Functional Specifications*

Pulse/Frequency Output Signal:
Output: 0 to 10 000 Hz, 50% duty cycle
Damping: 0.1 to 30 seconds, adjustable
Active: 24 V dc, 30 mA, Load >1000 Ω and <10 000 Ω
Passive: 3 to 30 V dc, 110 mA, Load >200 Ω and <10 000 Ω

Contact (Relay) Output Signal:
- Changeover relay
- 42 V ac/2 A; 24 V dc/1 A

Digital Input Signal (HART):
Input: 11 to 30 V dc, R = 4400 Ω
Activation Time: 50 ms

Current:
2.5 mA at 11 V dc
7 mA at 30 V dc

Supply Voltage and Power Consumption:
115 to 230 V ac: 9 VA
11 to 24 V ac: 9 W
24 V dc: 6 W
12 V dc: 5 W

Flowtube Excitation Frequency: When used with Model 47 Transmitter: 3-1/8 Hz pulsating dc current (±125 mA)
When used with Model 48 Transmitter: 3-1/8, 6-1/4, or 12-1/2 Hz pulsating dc current (±125 mA)

Communications: Model 47 Transmitter: HART Communication Protocol can be incorporated in the electronics provided.
Model 48 Transmitter: HART Communication Protocol can be provided using an "add-on" module which is easily inserted in the transmitter's bottom surface compartment. This can be done in the factory or in the field, as specified. This "add-on" feature allows other communication protocol modules to be easily used in the future by simply replacing the communications module.

Functions: Flow rate, two totalizers, low flow cutoff, flow direction, and diagnostics. Additionally, the Model 48 Transmitter provides a batch function.

Galvanic Isolation: All inputs and outputs are galvanically isolated.

Low Flow Cutoff–Programmable
- 0 to 9.9% of maximum flow rate
- Detection of empty pipe (special cable required–see Signal and Coil Driver section)

Model 47/48–*Functional Specifications (cont.)*

Totalizer: Two 8-digit totalizers for forward, net, and reverse flow. Reverse flow is indicated by a negative sign (-).

Empty Tube Zero: Automatic empty tube zero adjustment used to drive output signal to "zero flow rate" when the electrodes become uncovered by the conductive liquid.

Model 47/48 –*Physical Specifications*

Enclosure Construction (Including Terminal Box): The overall enclosure construction meets IEC IP67, and provides the environment protection NEMA Type 6 (submersion in 1.5 m
(5 ft) of water for 72 hours).

Enclosed Material: Fiberglass reinforced polyamide

Enclosure Finish: Gray and blue pigmented polyamide material

Transmitter Mounting: The transmitter is either directly mounted to 0the flowtube, or can be remotely mounted to a surface or DN 50 (2 in) pipe using a mounting bracket. See Optional Selections and Accessories, and Dimensions–Nominal sections.

Electrical Connections: Four holes with 1/2" NPT or/ M2° cable glands are provided for cable entry into the terminal box.

Mounting Position: The transmitter can be mounted in any position without degrading performance. The only requirements are that the flowtube be completely full with the process liquid during measurement, and that the electrodes should not be near the top or bottom of the pipeline. Also with either integrally or remote mounted transmitters, the enclosure box can be rotated 90° in either direction to allow selecting the best view of the displays and use of the keypad.

Approximate Mass:
Remote Mounted Transmitter: 1.65 kg (3.6 lb), includes mounting bracket

Transmitter Mounted to Flowtube:

Flowtube Size		Transmitter and Flowtube (a)	
SI (metric) units	U.S. customary units	kg	lb
DN 10	1/2 in	3.0	6.6
DN 15	3/4 in	3.0	6.6
DN 25	1 in	3.5	7.7
DN 40	1-1/2 in	4.2	9.3
DN 50	2 in	5.0	11.0
DN 65	2-1/2 in	6.3	13.9
DN 80	3 in	7.8	17.2
DN 100	4 in	10.8	23.8

Model 4700S–*Functional Specifications*

Nominal Flowtube[1] Sizes: 10, 15, 25, 50, 60, 65, 80, and 100 mm (1.2, 3/4, 1, 1-1/2, 2, 2-1/2, 3, and 4 in)

Flow Velocity:
Minimum Measuring Range: 0 to 0.25 m/s (0 to 0.82 ft/s)
Maximum Measuring Range: (0 to 32.8 ft/s)
Recommended Operating Velocity: Approximately 1.5 to 5 m/s (5 to 16 ft/s)

Test Pressure:
Ceramic-Lined Flowtube: 80 bar (1160 psi) which is two times the maximum process pressure
PFA-Lined Flowtube: 40 bar (580 psi) which is two times the maximum process pressure

Sanitary Approvals:
Ceramic-Lined Flowtube: 3-A and EHEDG Sanitary Standards
PFA-Lined Flowtube: 3-A Sanitary Standard

Ceramic Lining: This lining provides a crevice-free process surface. Ceramic also provides excellent corrosion and abrasion resistance and is suitable for high pressure, high temperature, or vacuum service applications.

PFA Lining: The PFA lining meets the sanitary material requirements of FDA. It is excellent when used with sanitary, clean, mildly corrosive, or sever corrosive fluids. It is satisfactory when used with mild abrasive fluids, and is not recommended for use with severe abrasive fluids.

End Connections Adapters:
Flowtube End of Adapter: Adapter clamped to flowtube using a sanitary clamp.

Type	Flowtube Description(a)	Rating
Welded to Pipeline	DIN 11850, ISO 2037 SMS 3008, and BS 4825-1 DN 10 to 80 (1/2 to 3 in) (a) DN 100 (4 in)	 40 bar (580 psi) 25 bar (360 psi)
Clamped to Pipeline	DIN 32676, ISO 2852, SMS 3016, and BS 4825-3 DN 10 to 50 (1/2 to 2 in) (a) DN 65 to 100 (2-1/2 to 4 in)	 16 bar (230 psi) 10 bar (145 psi)
Threaded to Pipeline	DIN 11851 DN 10 to 50 (1/2 to 1-1/2 in) (a) DN 50 to 100 (2 to 4 in) DIN 2853, SS 3351, BS 4825-4 DN 10 to 80 (1/2 to 3 in) (a) SMS 1145 DN 25 to 80 (1 to 3 in)	 40 bar (580 psi) 25 bar (360 psi) 16 bar (230 psi) 6 bar (87 psi)

Pipeline End of Adapter: Adapter either welded, clamped or threaded to pipeline; refer to Model Code, and see End Connection Adapters table below.

Process Fluid Conductivity: The minimum process fluid conductivity required is 5 µS/cm. For empty pipe detection, the minimum conductivity is 20 µS/cm. Refer to TI 27-072 for conductivities of various process liquids.

Model 4700S–*Functional Specifications (cont.)*

Signal and Coil Driver Cable Length: For remote transmitter installations, the maximum allowable cable length is 300 m (985 ft) between flowtube and transmitter when using standard 3-conductor (with shield) cable. This length can be increased to 500 m (1640 ft) by using a special cable. See Figure 3 for the relationship between minimum fluid conductivity and cable length. ALso see the transmitter product specification document PSS 1-6G1 A for further data relating to the transmitter-to-flowtube cables.

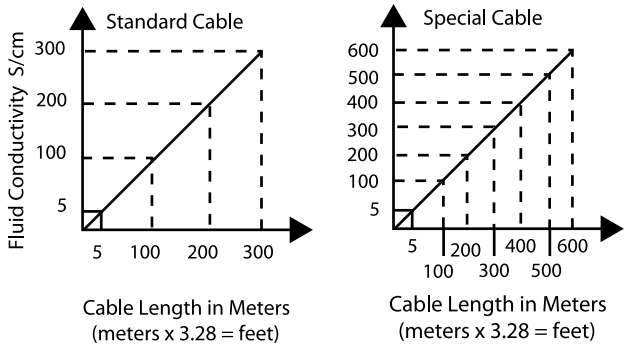

Figure 3. Process Fluid Conductivity vs. Cable Length

Ambient Temperature vs. Process Temperature with Integrally Mounted Transmitters: The ambient temperature limits of 50°C (122°F) specified when the transmitter is directly mounted is restricted, depending on the process temperature of the liquid. Figure 4 shows the reduction in ambient temperature required as the process temperature increases to its maximum limit.

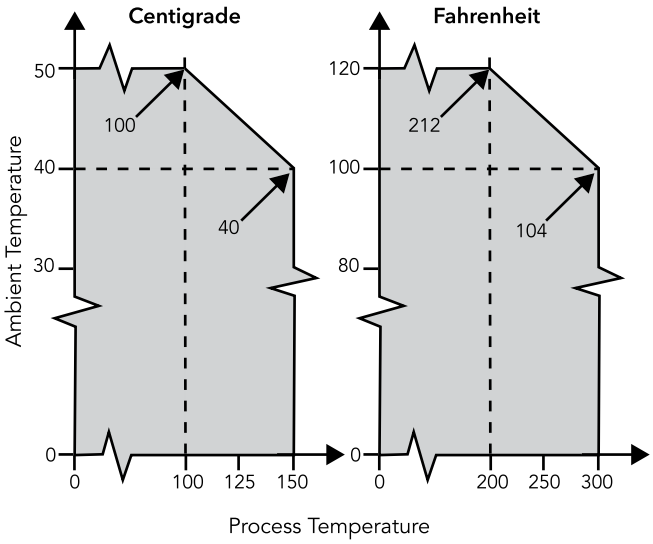

Figure 4. Ambient vs. Process Temperature for Intergrally Mounted Transmitters

Model 4700S–*Physical Specifications*

Enclosure Construction (Including Terminal Box): The overall enclosure construction meet IEC IP67 and provides the environmental protection of NEMA Type 4X. When used with an optional submersion kit, the enclosure meets IP68 and NEMA Type 6. See Optional Selections section.

Flowtube Enclosure: 316 ss

Terminal Box Enclosure: Fiberglass reinforced polyamide, or 316 ss, as specified

Flowtube Liner and Electrodes: Ceramic (Al2O3) liner with platinum electrodes, or PFA liner with Hastelloy C-276 electrodes

Gaskets: EPDM1, rated -20 to +150°C (-4 to +302F°) is standard; or optionally NBR1, rate -20 to + 100° (-4 to +212°F)

Clamps: AISI Type 304 stainless steel (304 ss)

End Connection Adapters: 316 ss

Model 4700S–*Optional Selections and Accessories*

NBR Gaskets: NBR gaskets are offered as options to the standard EPDM gaskets provided with each end connection sanitary clamp. Temperature rating of NBR gaskets is -20 to +100°C (-4 to +212°F) Specify Part Number per table below.

Flowtube Size	Part Number
DN 10 (1/2 in)	083G2216
DN 15 (3/4 in)	083G2217
DN 25 (1 in)	083G2219
DN 40 (1-1/2 in)	083G2221
DN 50 (2 in)	083G2222
DN 65 (2-1/2 in)	083G2223
DN 80 (3 in)	083G2224
DN 100 (4 in)	083G2225

1/2 NPT Conduit Connectors: The standard terminal box cable entries are through PG 13.5 cable glands. For users who use NPT conduit, 1/2 NPT conduit connectors are provided. Specify Part Number 083N4394.

Submersion Kit to IEC IP68: The standard flowtube enclosure meets IEC IP67 relating to the effects of immersion in water. Use of the submersion kit upgrades the protection in IEC IP68. The table below compares the standard protection, and improved protection using the submersion kit. Specify Part Number 08540220 for the IP68 Submersion Kit.

Designation	Submersion Depth	Submersion Duration
IP67; NEMA 4X (Standard)	1.5 m Water (5 ft Water)	72 hours
IP68; NEMA 8 (Optional)	10 m Water 33 ft Water)	72 hours

4700 Series Sanitary Magnetic Flowtubes

Nominal Flowtube Size	
DN 10 (1/2 in) Flowtube	-010
DN 15 (3/4 in) Flowtube	-015
DN 25 (1 in) Flowtube	-025
DN 40 (1-1/2 in) Flowtube	-040
DN 50 (2 in) Flowtube	-050
DN 65 (2-1/2 in) Flowtube	-065
DN 80 (3 in) Flowtube	-080
DN 100 (4 in) Flowtube	-100

Linear and Electrode Materials

Ceramic Liner with Platinum Electrodes	C
PFA Liner with Hastelloy C Electrodes[1]	P

Terminal Box

Fiberglass Reinforced Polyamide	
1/2″ NPT	F
M20	V
AISI Type 316SS Stainless Steel	
1/2″ NPT	H
M20	W

Electrical Safety

UL, ULc, CE, C-Tick; For use in General Purpose (Ordinary) Locations	A

End Connection

None[2]	NN
Tri-Clover® Welded Connection	WA
DIN 11850 Welded Connection	WB
ISO 2037 Welded Connection	WC
BS 4825-1 Welded Connection	WE
Tri-Clamp® Type	CA
DIN 32676 Clamp Type	CB
ISO 2852 Clamp Type	CC
BS 4825-3 Clamp Type	CE
DIN 11851 Threaded Connection	TA
SMS 1145 Threaded Connection	TE

Optional Model Suffix(es) Included

EPDM gasket material	–E
NBR gasket material	–N

Notes

1 Select only for pressure less than or equal to 40 bar (4 MPa, 580 psi).
2 Generally selected for flowtube replacement.
3 Two adapters, two EPDM gaskets, and two clamps (for joining adapter to flowtube) are provided with these selections.

47/48 Series Sanitary Magnetic Flowtubes

Magnetic Flow Transmitter						
System Accuracy of ±0.5% with Model 4700S Sanitary Flowtubes with Ceramic or PFA liners	47					
Magnetic Flow Transmitter						
System Accuracy of ±0.25% with Model 4700S Sanitary Flowtubes with Ceramic Liner, and ±0.05% with Model 4700S Sanitary Flowtubes with a PFA Liner		48				
Supply Voltage and Frequency						
115 to 230 V ac, 50 to 60 Hz			-A			
11 to 24 V ac or 11 to 30 V dc			-B			
Communication Protocol						
4 to 20 mA Current Output				A		
Intelligent; Digital, HART and 4 to 20 mA(1)						
Indicator with Keypad						
With Indicator and Keypad					A	
Blind; without Indicator and Keypad(2)					B	
Transmitter Enclosure						
Fiberglass Reinforced Polyamide Enclosure Meet IEC IP67 and NEMA Type 6(3)						1
Electrical Safety						
UL, ULc, CE, C-Tick; For use in General Purpose (Ordinary) Locations							A

Note

1 When HART Communication is specified, included is a waterproof connector for installation in the flowtube terminal box. With the MOdel 47 Transmitter, HART communications is incorporated in the electronics provided. With the Model 48 Transmitter, HART communications is provided by and "add-on" module (included) in the field or during installation. See "Optional Selections and Accessories" section.

2 The "blind" (o indicator or keypad) transmitter is not offered with Communication Protocol Code "A" (4 to 20 mA).

3 If transmitter is not directly mounted to a flowtube, then a mounting bracket, and signal and coil driver cable are required. See "Optional Selections and Accessories" section for mounting bracket and cable specifications, and ordering information.

The following chapters contain Product Specifications of the Instruments:

RTT15	Temperature Transmitters (4-20 mA/HART, Foundation Fieldbus, and Profibus)
RTT20	Temperature Transmitters (4-20 mA, 4-20 mA/HART, and with LCD Indicators)
RTT30	Temperature Transmitter
RTT80	Temperature Transmitter
PR	Series Platinum Resistance Temperature Detectors (RTDs)
MT	Series Minox™ Thermocouples
Thermowells	Thermowells
DEWCEL	Dew Point Measurement System

I/A Series® Model RTT15 Temperature Transmitters

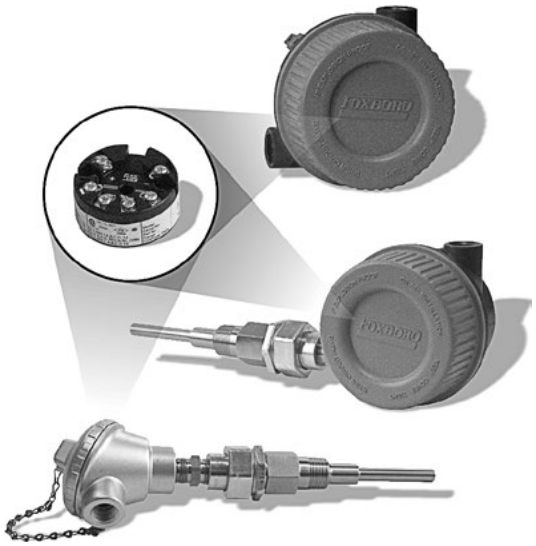

I/A Series Temperature Transmitters operate with RTDs and thermocouples and also accept ohm or dc millivolt inputs. The linearized and isolated output is 4 to 20 mV dc with HART protocol, or Foundation Fieldbus or Profibus digital protocol, depending on selected version.

For complete specifications, refer to Product Specification Sheet PSS 2A-1 F5 A.

- Single Unit
  - ✔ Accepts RTD, thermocouple, ohms, or mV dc
- Sensor Fail Check
- Supports 2, 3, or 4-wire RTDs
- Choice of Communications and Outputs
  - ✔ 4 to 20 mA/HART
  - ✔ Foundation Fieldbus
  - ✔ Profibus
- Variety of weatherproof and explosionproof housings for remote or element mounting.

Foxboro RTT15 Temperature Transmitters provide highly reliable, stable, and accurate temperature measurements, using either RTD or thermocouple sensors.

This microprocessor-based transmitter is fully user-configurable and is available with a choice of 4-20 mA/HART, Foundation Fieldbus, or Profibus communications.

The compact DIN B size module is available in a variety of weatherproof or explosionproof housings, including remote, pipe-mounted types and integral, sensor-mounted versions. The bare module may also be surface or DIN rail mounted (using optional DIN rail clip). The transmitter is also intrinsically safe.

RTT15 transmitters can be used with a wide variety of sensors, including two, three, or four-wire RTDs and Types B, E, J, K, L, N, R, S, T, U, W3, and W4 thermocouples. In thermocouple applications, the transmitter is configurable for an internal, external, or constant cold junction reference.

The 4-20mA/HART version is configurable for low and high out-of-range and failure current signals, including conformance to NAMUR 43. Diagnostics include sensor short and open detection for RTDs and sensor open detection for thermocouples.

The 4-20 mA/HART version also supports average and difference measurement, using dual two-wire RTDs or thermocouples.

The Foundation Fieldbus/Profibus version supports average, difference, and redundant measurements, using a choice of dual two-wire RTDs or thermocouples or a combination of a two or three-wire RTD with a thermocouple.

The RTT15 transmitter is part of the Foxboro family of intelligent temperature transmitters and carries a standard five year warranty. The combination of high functionality, performance, and reliability at a very affordable price results in exceptional value.

Span and Range Limits – RTD Inputs

	Span Limits		Range Limits	
RTD Type	**°C**	**°F**	**°C**	**°F**
Platinum, 100 Ω	10 and 1050	18 and 1890	-200 and +850	-328 and +1562
Nickel 100 Ω	10 and 310	18 and 558	-60 and +250	-76 and +482

Span and Range Limits - TC Input

	Span Limits		Range Limits	
TC Type	**°C**	**°F**	**°C**	**°F**
B	100 and 1420	180 and 2556	400 and 1820	752 and 3308
E	50 and 1100	90 and 1980	-100 and +1000	-148 and +1832
J	50 and 1300	90 and 2340	-100 and +1200	-148 and +2192
K	50 and 1552	90 and 2794	-180 and +1372	-292 and +2502
L	50 and 1100	90 and 1980	-200 and +900	-328 and +1652
N	50 and 1480	90 and 2664	-180 and +1300	-292 and +2372
R	100 and 1810	180 and 3258	-50 and +1760	-58 and +3200
S	100 and 1810	180 and 3258	-50 and +1760	-58 and +3200
T	50 and 600	90 and 1080	-200 and +400	-328 and +752
U	50 and 800	90 and 1440	-200 and +600	-328 and 1112
W3	100 and 2300	180 and 4140	0 and 2300	32 and 4172
W5	100 and 2300	180 and 4140	0 and 2300	32 and 4172

Transmitter Accuracy(2) – General Value

HART
±0.05% of span for all input types.

FIELDBUS/PROFIBUS
±0.05% of reading for all input types.

Transmitter Accuracy(2) – Basic Value

PLATINUM RTD INPUT
±0.1°C (±0.18°F)

TC TYPE E, J, K, L, N, T, AND U INPUT
±0.5°C (±0.9°F)

TC TYPE B, R, S, W3, AND W5 INPUT
± 1.0°C (±1.8°F)

2 Transmitter accuracy is the greater of the general or basic values listed. This value does not include specific sensor effects.

How to Order – Specify RTT15

Output:

4 to 20 mA with HART digital communications	-T
FOUNDATION Fieldbus H1 digital communications	-F
Profibus PA digital communications	-P

Input Configuration:

Single Input – configured for one sensor	1
Dual Input – configured for average of two sensors of the same type	4
Dual Input – configured for difference of two sensors of the same type	5
Dual Input – configured for redundancy of two sensors of the same type (not available with -T Output Signal)	6

Housing and Sensor Mounting:

Basic Module Without Housing; for use with Remote Sensor	B
Connection Head Housing (aluminum weatherproof) with Bare Sensor	C
Connection Head Housing (aluminum explosionproof); with Bare Sensor	D
Connection Head Housing (aluminum weatherproof); w/Sensor for Thermowell Mtg.	E
Connection Head Housing (aluminum explosionproof); w/Sensor for Thermowell Mtg.	F
Universal Housing (aluminum); for use with Remote Sensor (Sensor Ordered Separately)	S
Universal Housing (stainless steel); for use with Remote Sensor. (Sensor Ordered Separately)	T
Universal Housing (aluminum); with Bare Sensor	W
Universal Housing (stainless steel); with Bare Sensor	Y
Universal Housing (aluminum); with Sensor for Thermowell Mounting	L
Universal Housing (stainless steel); with Sensor for Thermowell Mounting	M

Sensor Length: (applicable when a single sensor is to be factory-assembled to housing)

None – Sensor Ordered Separately (requires Housing Code B, S, or T)	N
2 inch (50 mm)	A
2.5 inch (64 mm)	B
3 inch (76 mm)	C
3.5 inch (89 mm)	D
4 inch (102 mm)	E
4.5 inch (114 mm)	F
5 inch (127 mm)	G
5.5 inch (140 mm)	H
6 inch (152 mm)	J
7 inch (178 mm)	K
8 inch (203 mm)	L
9 inch (229 mm)	M
10 inch (254 mm)	P
11 inch (279 mm)	Q
12 inch (305 mm)	R
18 inch (457 mm)	S
24 inch (610 mm)	T
30 inch (762 mm)	U
36 inch (914 mm)	V
Custom lengths between 2 & 120 inches (50 mm & 3 m)	X

Measurement Input Type:

Thermocouple, Type K	K
Thermocouple, Type J	J
Thermocouple, Type E	E
Thermocouple, Type T	T
Thermocouple, Type N	N
Thermocouple, Type B	B
Thermocouple, Type L	L
Thermocouple, Type R	R
Thermocouple, Type S	S
Thermocouple, Type U	U

Thermocouple, Type W3	3
Thermocouple, Type W5	5
RTD, 2-wire, 100 ohm platinum IEC 751 (ASTM –B Standard Accuracy), 316 ss Sheath	2
RTD, 3-wire, 100 ohm platinum IEC 751 (ASTM –B Standard Accuracy), 316 ss Sheath Housing B, S, T Housing C, D, E, F, W, Y, L, M	Q
RTD, 4-wire, 100 ohm platinum IEC 751 (ASTM –B Standard Accuracy), 316 ss Sheath Housing B, S, T Housing C, D, E, F, W, Y, L, M	4
RTD, 3-wire, 100 ohm platinum IEC 751 (ASTM –A High Accuracy), 316 ss Sheath Housing B, S, T Housing C, D, E, F, W, Y, L, M	A
RTD, 4-wire, 100 ohm platinum IEC 751 (ASTM –A High Accuracy), 316 ss Sheath Housing B, S, T Housing C, D, E, F, W, Y, L, M	6
RTD, 3-wire, 100 ohm nickel DIN 43760, 316 ss Sheath	I
ohm (only available with Housing Codes B, S, or T)	O
Millivolt (only available with Housing Codes B, S, or T)	M

Thermowell Assembled to Housing:

No Well or Well Supplied Separately	N/A
Threaded, ¾ NPD Ext. Thread, 304 ss, Plain Well Assembled to Hsg. w/Union	TA
Threaded, ¾ NPD Ext. Thread, 316 ss, Plain Well Assembled to Hsg. w/Union	TB
Threaded, ¾ NPD Ext. Thread, 316 ss, Lagging Well Assembled to Hsg. w/Union	TC
Threaded, 1 NPT Ext. Thread, 316 ss, Plain Well Assembled to Hsg. w/Union	TD
Threaded, 1 NPT Ext. Thread, Hastelloy C, Plain Well Assembled to Hsg. w/Union	TE
Threaded, 1 NPT Ext. Thread, 304 ss, Lagging Well Assembled to Hsg. w/Union	TF
Threaded, 1 NPT Ext. Thread, 316 ss, Lagging Well Assembled to Hsg. w/Union	TG
Flanged, 1 in. ANSI Class 150 RF, 316 ss, Plain Well Assembled to Hsg. w/Union	TH
Flanged, 1.5 in. ANSI Class 150 RF, 316 ss, Plain Well Assembled to Hsg. w/Union	TI
Thermowell Series "W-", assembled to housing; specify "W-" model code	TX

Electrical Classification: (See PSS for Description and Restrictions)

CSA Certified	C
ATEX Intrinsically Safe	E
ATEX Flameproof	D
FM Approved	F

Optional Selections:

Housing Features (Select Only One)

Custody Transfer Lock and Seal (only available with Housing S, T, W, Y, L, & M.	-A1
PG13.5 Conduit Thread (only available with Housing S, T, W, Y, L, & M, only available with Electrical Classifications E & D)	-A2
Metric Conduit Adaptor (½ NPT by M20 x 1.5) (not available w/Hsg Code B, available only with Electrical Certification E)	-A3

Housing Connection To Well: (Select Only One)

Stainless Steel Union and fittings (only available with Housing E, F, & L - std on M)	-S3
1/2 NPT fitting (instead of standard ½ NPT) to fit user-supplied well with ½ NPT. internal thread (only available when Housing Code E, F, L, or M is selected and Thermowell Code NA is selected)	-D5

Mounting Sets: (Select Only One)

Mounting Set – Painted Steel (only available with Housing S, T, W, Y, L, & M)	-M1
Mounting Set – Stainless Steel (only available with Housing S, T, W, Y, L, & M)	-M2
Includes clip for DIN Rail Mounting the Basic Module (only available w/Housing Code B)	-D1
Adapter Plate & Screws to mount RTT15 Module in E93/E94/893/RTT10 Housings (only available with Housing Code B)	-D3
Inconel Sheath on Sensor (not available with Sensor Code N)	-S1
VIno with 3/4 NPT external thread	-D4
Custom Database Configuration (requires "C2 Form" with all data specified)	-C2
Without Instruction Book and CD	-K1
Indicator	-L2

I/A Series® Model RTT20 Temperature Transmitters

I/A Series Temperature Transmitters accept inputs from platinum RTDs (DIN, IEC or SAMA), various thermocouples, ohms, or dc millivolts. The linearized and isolated output is configurable for 4 to 20 mA dc, 4 to 20 mA dc with Hart.

For complete specifications, refer to Product Specification Sheet PSS 2A-1 F4 A.

- Single Unit
  - ✓ *accepts RTD, thermocouple, ohms, or mV dc*
- Sensor Fail Check
- I/A Series System Digital Integration (FoxCom or HART)
- Setup and Operation via I/A Series System, PC Configurator, or Optional LCD Indicator with Pushbuttons
- Choice of Communications and Outputs
  - ✓ *Hart with 4 to 20 mA output*
  - ✓ *4 to 20 mA output only*
- Optional LCD Indicator with Pushbutton Configuration

4

Functional Specifications

Range and Maximum Span Limits:

Input Type (Model Letter)	Sensor Input	Range Limits °C	Range Limits °F	Maximum Span °C	Maximum Span °F
	RTDs				
Q	Pt 100 DIN/IEC	-200 to 850	-328 to 1562	1050	1890
A	Pt 100 DIN/IEC	-200 to 850	-328 to 1562	1050	1890
P	Pt 100 SAMA	-200 to 650	-328 to 1202	850	1530
D	Ni 200	-130 to 315	-202 to 599	445	801
G	Ni 120 (Minco)	-80 to 320	-112 to 608	400	720
I	Ni 100	-60 to 250	-76 to 482	310	558
F	Cu 10	-70 to 150	-94 to 302	220	396
	Thermocouples				
B	Type B	0 to 1820	32 to 3308	1820	3276
C	Type C	0 to 2320	32 to 4208	2320	4176
E	Type E	-270 to 1000	-454 to 1832	1270	2286
J	Type J	-210 to 1200	-346 to 2129	1410	2538
K	Type K	-270 to 1372	-454 to 2502	1642	2956
L	Type L	-200 to 900	-328 to 1652	1100	1980
N	Type N	-270 to 1300	-454 to 2372	1570	2826
R	Type R	-50 to 1768	-58 to 3214	1818	3272
S	Type S	-50 to 1768	-58 to 3214	1818	3272
T	Type T	-270 to 400	-454 to 752	670	1206
U	Type U	-200 to 600	-328 to 1112	800	1440
	Dew Point				
W		-45 to 60	-50 to 140	105	195
	Other				
M	Millivolt	-15 to 115 mV dc		120 mV dc	
O	Ohms	0 to 500 ohms		500 ohms	
Z	Custom	2 to 22 User Defined Points			

How to Order—Specify model number RTT20 followed by order code for each selection

Output					
4-20 mA (CAUTION—See Note[1])	I				
4-20 mA with HART communications[3]	T				
Package Configuration					
Basic Unit		1B			
Thermowell mount (Aluminum Housing)		1L			
Thermowell mount (316ss Housing)		1M			
Bare Element mount (Aluminum Housing)		1W			
Bare Element Mount (316ss Housing)		1Y			
Aluminum Housing, no sensor		1S			
316ss Housing, no sensor		1T			
Sensor Length ("A" length for Code 1W or "U+T" length for Code 1L)					
None[4]			N		
2 inch (50 mm)[5]			A		
2.5 inch (64 mm)[5]			B		
3 inch (76 mm)[5]			C		
3.5 inch (89 mm)[5]			D		
4 inch (102 mm)[5]			E		
4.5 inch (114 mm)[5]			F		
5 inch (127 mm)[5]			G		
5.5 inch (140 mm)[5]			H		
6 inch (152 mm)[5]			J		
7 inch (178 mm)[5]			K		
8 inch (203 mm)[5]			L		
9 inch (229 mm)[5]			M		
10 inch (254 mm)[5]			P		
11 inch (279 mm)[5]			Q		
12 inch (305 mm)[5]			R		
18 inch (457 mm)[5]			S		
24 inch (601 mm)[5]			T		
30 inch (762 mm)[5]			U		
36 inch (914 mm)[5]			V		
Length per Sales Order (120 inch max.)[5]			X		
Measurement Input Type					
Thermocouple					
None				X	
Type B				B	
Type C				C	
Type E				E	
Type J				J	
Type K				K	
Type L				L	
Type N				N	
Type R				R	
Type S				S	
Type T				T	
Type U				U	
RTDs					
100 ohm platinum DIN 751 (ASTM-B Standard Accuracy)					Q
100 ohm platinum DIN 751 (ASTM-A High Accuracy)					A
100 ohm platinum SAMA					P
200 ohm nickel					D
120 ohm nickel Minco					G
100 ohm nickel DIN 43760					I
10 ohm copper					F

Measurement Input Type (continued)

Other (Sensor Length N Only)

Millivolt	M
Ohms	O
Dew point (Foxboro Model 2781 Dewcell)	W
None	X
Custom (22 point configurable)	Z

Electrical Agency Approval (see PSS for description and restrictions)

CSA Intrinsically Safe	CA
CSA Explosion proof(6,7)	CD
CSA Division 2	CN
CENELEC Intrinsically Safe	EA
ATEX Flameproof(13)	ED
FM Intrinsically Safe	FA
FM Explosion proof(6,7)	FD
FM Non-incendive	FN
European Non sparking	KN

Optional Selections

Custody Transfer Lock and Seal	A1
PG 13.5 Conduit Thread(8)	A2
Metric adapter (1/2" NPT to PG 13.5)	A3
Custom Database Configuration	C2
DIN Rail Mounting Hardware(10)	D1
Ship with thermowell attached(11)	D2
Adapter plate	D3
Delete Paper Instruction Book	K1
CD-ROM Instruction Book	K2
Three line LCD/Configurator	L3
Mounting Set(12)	M1
Stainless Steel Mounting Set(12)	M2
Inconel Sheath(12)	S1
Dual Sensor (2 two wire RTDs in one sheath)(5)	S2
4 wire RTD(5)	S4

Specify calibrated range _____ to _____ (°C or °F)

Specify tag number

Specify Thermowell for package configuration code 1L or 1m

Notes

1 Version I cannot be user-configured unless equipped with optional LCD/Configurator Code L3.
2 Remote configuration with PC20, PC50, or the I/A Series System.
3 Remote configuration with a HART Communicator, PC20, PC50, or I/A Series System.
4 Always selected for Package Configuration Code 1B, 1S, and 1T.
5 Available with Package Configuration Code 1Y, 1W, 1L, and 1M only.
6 Must have integrally mounted thermowell option -D2 on all explosion proof agency certifications when Package Configuration Code 1L or 1M is specified.
7 Available with Package Configuration Codes 1L, 1M,1S, and 1T only.
8 Available with Package Configuration Code 1S or 1T with electrical code EA, ED or KN only.
9 Available with Output Code D when configured for FoxCom digital output and tied to FBM 18, 39, 43 or 44.
10 Available with basic Package Configuration Code 1B only.
11 Must have integrally mounted thermowell option -D2 on all explosion proof agency certifications.
12 Mounting Set for 50 mm (2 inch) pipe or surface mount only available with Package Configuration Code 1S or 1T.
13 Package Configuration Codes 1S and 1T only.

I/A Series® Model RTT30 Temperature Transmitters

I/A Series Temperature Transmitters accept inputs from platinum RTDs (DIN, IEC or SAMA), and can be used with a wide variety of temperature sensors, including 2, 3, and 4 wire RTDs, most popular thermocouples, and various thermocouples, ohms, mA, or dc millivolts input devices.

For complete specifications, refer to Product Specification Sheet PSS 2A-1 F6 A.

- Field proven microprocessor based transmitter ensures accurate measurement and performance.
- Remote Communication with HART Communicator or PC based Configurator.
- Dual, independent sensor input capability for difference/average measurement, or sensor backup.
- Drift alarm, sensor backup, and sensor corrosion detection enhances reliable operation.
- Sensor input to output galvanic isolation of 2 kV.
- Operation voltage monitoring for high measurement performance.
- Compact, dual compartment enclosure with fully potted electronics. Enclosure meets 1P67 and NEMA 4X ratings.

Functional Specifications

Range and Maximum Span Limits:

RDT Designation and Description	Measurement Range Limits	Minimum Span
Cu10 – alpha = 0.004274; To Edison Copper Winding No. 15	-100 and +260°C (-148 and +500°F)	10°C (18°F)
Cu50 – alpha = 0.004278; To GOST	-200 and +200°C (-328 and +392°F)	10°C (18°F)
Cu100 – alpha = 0.004278; To GOST	-200 and +200°C (-328 and +392°F)	10°C (18°F)
Ni100 – alpha = 0.006180; To DIN 43760	-60 and +250°C (-76 and +482°F)	10°C (18°F)
Ni120 – alpha = 0.006720; To Edison Curve	-70 and +270°C (-94 and +518°F)	10°C (18°F)
Ni1000 – alpha = 0.006180; To DIN 43760	-60 and +150°C (-76 and +302°F)	10°C (18°F)
Pt50 – alpha = 0.003911; To GOST	-200 and +1100°C (-328 and +2012°F)	10°C (18°F)
Pt100 – alpha = 0.003916; To JIS C1604-81	-200 and +649°C (-328 and +1200°F)	10°C (18°F)
Pt100 – alpha = 0.003911; To GOST	-200 and +850°C (-328 and +1562°F)	10°C (18°F)
Pt100 – alpha = 0.00385; To IEC 60751	-200 and +850°C (-328 and +1562°F)	10°C (18°F)
Pt200 – alpha = 0.00385; To IEC 60751	-200 and +850°C (-328 and +1562°F)	10°C (18°F)
Pt500 – alpha = 0.00385; To IEC 60751	-200 and +250°C (-328 and +482°F)	10°C (18°F)
Pt1000 – alpha = 0.00385; To IEC 60751	-200 and +250°C (-328 and +482°F)	10°C (18°F)

Thermocouple Designation and Description	Measurement Range Limits	Minimum Span
Type T – Cu-CuNi; IEC 584-1	-270 and +400°C (-454 and +752°F)	50°C (90°F)
Type E – Cu-CuNi; IEC 584-1	-270 and +1000°C (-454 and +1832°F)	50°C (90°F)
Type N – Cu-CrSi-NiSi; IEC 584-1	-270 and +1300°C (-454 and +2372°F)	50°C (90°F)
Type K – NiCri-Ni; IEC 584-1	-270 and +1372°C (-454 and +2501°F)	50°C (90°F)
Type J – Fe-CuNi; IEC 584-1	-210 and +1200°C (-346 and +2192°F)	50°C (90°F)
Type U – Cu-CuNi; IEC 43710	-200 and +600°C (-328 and +1112°F)	50°C (90°F)
Type L – Fe-CuNi; IEC 43710	-200 and +900°C (-328 and +1652°F)	50°C (90°F)
Type R – PtRh13-Pt; IEC 584-1	-50 and +1768°C (-58 and +3214°F)	50°C (90°F)

Functional Specifications (continued)

Thermocouple Designation and Description	Measurement Range Limits	Minimum Span
Type S – PtRh10-Pt; IEC 584-1	-50 and +1768°C (-58 and +3214°F)	50°C (90°F)
Type B[a][b] **–** PtRh30-PtRh6; IEC 584-1	0 and +1820°C (32 and +3308°F)	50°C (90°F)
Type C – W5Re-W26Re; ASTM E988	0 and +2320°C (32 and +4208°F)	50°C (90°F)
Type D – W3Re-W25Re; ASTM E988	0 and +2495°C (32 and +4523°F)	50°C (90°F)

Notes

a The measuring error (see Table 1) will increase for temperatures lower than 300°C (572°F)
b When operation conditions are based on a large temperature range, the RTT30 offers the ability to spit the range. For example, a Type S or R thermocouple can be used for the low range, while a Type B can be used for the upper range.

How to Order–Specify model number RTT30 followed by order code for each selection Configuration

Communication Protocol
Digital HART and 4 to 20 mA dc . . . . . -A

Housing
Aluminum Housing: No Indicator 1
Aluminum Housing: With Indicator 2
316L ss Housing: No Indicator 3
316L ss Housing: With Indicator 4

Cable Entry
1/2 NPT Threaded Connection 1
M20 x 1.5 Threaded Connection[a] 2

Mounting Sets
None — Not required 1
L -Shaped 304 ss Bracket, for Surface or Nominal DN 50 or 2 in Pipe Mounting 2
U-Shaped 316L ss Bracket, for Nominal DN 50 or 2 in Pipe Mounting 3

Electrical Safety (also see Electrical Safety Specifications section)[c]
None — Not used in Hazardous Areas . . . . . A
FM IS, NI I/1+2/ABCD; also Class 1, Zones 0 and 2 C
FM XP, NI, DIP, I, II, III/1+2/A-G; also Class 1, Zones 1 and 2[a] . . . . . F
FM XP, DIP, IS, NI, I, II, III/1+2/A-G; also Class 1, Zones 0, 1 and 2[a] . . . . . J
CSA for use in Ordinary/General Purpose locations . . . . . O
CSA IS, NI I/1+2 ABCD; also Class 1, Zones 0 and 2 . . . . . D
CSA XP, NI, DIP, I, II, III/1+2/A-G; also Class 1, Zones 1 and 2 . . . . . G
CSA XP, DIP, IS, NI I, II, III/1+2/A-G; also Class 1, Zones 0, 1 and 2 . . . . . K
ATEX II 1 G, EEx ia IIC, T4/T5/T6 . . . . . B
ATEX II 2 G, EEx d IIC, T4/T5/T6 . . . . . E
ATEX EEx d, EEx ia, T4/T5/T6 . . . . . H
ATEX II 3 G, EEx nA nL IIC, T4/T5/T6 L
ATEX II D; IP66/67 . . . . . N
ATEX II GD; EEx ia IIC, T4/T5/T6 . . . . . T

Device Setup
Factory Default Setup . . . . . A
Setup according to Configuration Sheet . . . . . B

Optional Selections
Works Calibration Certificate; 6 Point Calibration, 60 Hz Filter[b] . . . . . -F1
Marking — Tag on Metal Plate; information base on Submitted Configuration Sheet . . . . . -Z1

Notes

a The M20 threaded connection is not available with FM explosionproof approval Codes F and J.
b The Calibration Certificate is an evaluation and documentation of 6 fixed resistance values over the complete measuring range.
c Contact Foxboro for a listing of electircal approvals and certifications available at this time.

RTT80 - I/A Series Advanced Temperature Transmitters with HART Communication Protocol

The RTT80 is a mid-tier two-wire temperature transmitter available with HART, FOUNDATION Fieldbus, dual sensor inputs, dual compartment housing, diagnostics, alarms, RTDs and TCs. The RTT80 stands out due to signal reliability, long-term stability, high precision and advanced diagnostics (important in critical processes). For the highest level of safety, availability and risk reduction. PSS 2a-1f8a

- Field proven microprocessor based transmitter ensures accurate measurement and performance.
- Remote Communication with HART Communicator or PC based Configurator.
- Dual, independent sensor input capability for difference/average measurement, or sensor backup.
- Drift alarm, sensor backup, and sensor corrosion detection enhances reliable operation.
- Sensor input to output galvanic isolation of 2 kV.
- Operation voltage monitoring for high measurement performance.

Functional Specifications

Temperature Inputs:	2-, 3- and 4- wire RTD (Pt50, Pt100, Pt200, Pt500, Pt1000, Ni100, Ni120, Cu50) Thermocouples; B,C,D,E,J,K,L,N,R,S,T and U Resistance and Millivolt input devices
Ambient Temperature Range Operative Limits:	Without Integral Indicator: -40 and +85°C (-40 and +185°F) With Integral Indicator: -40 - +70°C (-40 and +158°F)
Relative Humidity:	0 and 100% (condensation permitted)
Supply Voltage:	With HART Indicator: 18 – 40 V dc Without HART Indicator: 11 – 40 V dc
Repeatability:	+/-0.0015% of the input range of the sensors
Long-term Stability:	<0.1oC (<0.18 °F) per year or < 0.5% per year (whichever is greater)
Response Time:	1 second per channel
Fault Information: per NAMUR NE 43:	Under-range: Linear drop to 3.8 mA Over-range: Linear rise to 20.5 mA Failure (sensor break or short circuit) <3.6 mA low or > 21 mA high (Selectable). High alarm is adjustable between 21.6 and 23 mA for flexibility with various control systems.
Warm-Up Time:	4 seconds
Electrical Conduit:	½ NPT and M20
Weight:	Approximately 1.4 to 1.8 oz

Communications					
4 to 20 mA with HART digital communications	T				
Sensor Input					
Single Input; Configured for One Sensor[l]		1			
Dual Input; Configured for Average of two 2-wire sensors of same type		2			
Housing and Sensor Mounting					
Basic Module for DIN Rail or Surface Mounting or Replacement			BB		
Universal Aluminum Housing for use with Remote Sensor[j]			SS		
Universal SS Housing for use with Remote Sensor[j]			TT		
Universal Aluminum Housing w/Bare Sensor			WW		
Universal SS Housing w/Bare Sensor			YY		
Universal Aluminum Housing w/ Sensor and Thermowell Mounting			LL		
Universal SS Housing w/ Sensor and Thermowell Mounting			MM		
Input Measurement Type (k)					
Thermocouple, Type B				B	
Thermocouple, Type C				C	
Thermocouple, Type D				D	
Thermocouple, Type E				E	
Thermocouple, Type J				J	
Thermocouple, Type K				K	
Thermocouple, Type L				L	
Thermocouple, Type N				N	
Thermocouple, Type R				R	
Thermocouple, Type S				S	
Thermocouple, Type T				T	
Thermocouple, Type U				U	
2-wire RTD, 100 ohm platinum IEC 751 (ASTM-B Std Accuracy) SS Sheath				2	
3-wire RTD, 100 ohm platinum IEC 751 (ASTM-B Std Accuracy) SS Sheath				Q	
4-wire RTD, 100 ohm platinum IEC 751 (ASTM-B Std Accuracy) SS Sheath				4	
3-wire RTD, 100 ohm platinum IEC 751 (ASTM-A High Accuracy) SS Sheath				A	
4-wire RTD, 100 ohm platinum IEC 751 (ASTM-A High Accuracy) SS Sheath				6	
3-wire RTD, 100 ohm nickel DIN 43760, SS Sheath				I	
Dual 3-wire RTD, 100 ohm platinum IEC 751 in one thermowell[a]				V	
Ohms input				O	
Millivolt input				M	
Thermowell Assembled to Housing					
No Well or Well is supplied separately[b]					NA
Thermowell Series "T-" assembled to housing; specify child thermowell					TK
Thermowell Series "W-" assembled to housing; specify "W-" model code[c] [e]					TX

4

Hazardous Area Certifications

Non-hazardous area	ZZ
CSA IS, I/1/ABCD	CA
CSA NI I/2/ABCD	CN
CSA Explosionproof, Class I, Div 1, BCD; Dust-ignitionproof, Class II Div 1, EFG, Class IIII, Div 1. Also zone certified, Cl I, Zone 1, Ex d IIC[f]	CD
ATEX II 1G EEx ia IIC T4/T5/T6	AA
ATEX II3G EEx nA, nL, IIC T4/T5/T6	AN
ATEX Flameproof, II 1/2 G Ex d IIC, ATEX Flameproof, II 2 G Ex d IIC ATEX Flameproof, II 2 D[f]	AD
FM IS, I/1/ABCD	FA
FM NI I/2/ABCD	FN
FM explosionproof, Class I, Division 1, Groups B, C and D; Dust-ignitionproof, Class II, Division 1, Groups E, F and G; Class III Division 1[f]	FD
IECEx Ex ia IIC T4/T5/T6	EA
IECEx Ex nA, nL, IIC T4/T5/T6	EN
IECEx Flameproof, Ex d IIC	ED
NEPSI Ex ia IIC T4-T6[l]	NA
NEPSI Ex nA nL IIC T4/T5/T6[l]	NA
NEPSI Flameproof, Ex d IIC[l]	ND

Optional Selections

Housing Features

Custody Transfer Lock and Seal[f]	A1
Metric M20 Conduit Connection[f]	A3

Housing Connection to Well

Stainless Steel Union and Fittings[g]	S3
Thermowell with ¾" NPT internal Thread, supplied by customer[c]	D4

Mounting Sets

Mounting Set – Painted Steel[f]	M1
Mounting Set – Stainless Steel[f]	M2
Clip for DIN rail mounting of the basic module[h]	D1

Other Optional Features

Custom Database Configuration	C2
Omit Instruction Book (CD-ROM)	K1
With Local Indicator	L1
Cleaned and Prepared for Oxygen Service[i]	C5
SIL 2 Certification[e][l]	S2
Wake Frequency Calculations[c]	WF
Add ½ inch to sensor length	H1
NACE Compliant Thermowell[c][d]	N1

Notes
(a) Requires Housing and Sensor Mounting Code JJ, KK, NN, PP, WW, YY, LL or MM.
(b) Required with Housing and Sensor Mounting Codes BB, JJ, KK, QQ, RR, SS, TT, WW and YY.
(c) Requires Housing and Sensor Mounting Code NN, PP, LL or MM.
(d) Applies only to Thermowell code "TK".
(e) HART protocol only.
(f) Not available with Housing and Sensor Mounting Code BB.
(g) Available with Housing and Sensor Mounting codes NN and LL. Standard on Housing and Sensor Codes PP and MM.
(h) Housing and Sensor Mounting Code BB only.
(i) Not available with Housing and Sensor Mounting Codes BB, QQ, RR, SS and TT.
(j) Sensor ordered separately.
(k) Transmitter is factory configured for the measurement type specified whether sensor is included or not. You can change the configuration to a different type using appropriate configuration software for the selected protocol or specify -C2 Option for custom factory configuration. On dual sensor input (Sensor Input = 2), both inputs are configured the same.
(l) Not available at this time.

PR Series Platinum Resistance Temperature Detectors (RTDs)

The PR Series RTDs are sensors whose electrical resistance changes with a change in temperature. They measure temperatures from -200 to +650°C (-320 to +1200°F) and are calibrated to either ASTM (IEC, DIN) or SAMA standard curves. The resistance output from the element may be directly connected to a variety of resistance temperature measurement instruments.

Functional Specifications:

Temperature Limits: The maximum temperature limit is determined by the lowest upper range limit (URL) of the element, connection head, or sheath.

Element: -200 and +650°C (-330 and +1200°F)

Connection Head: -40 and +105°C (-40 and +220°F)

316 ss Sheath: -200 and +480°C (-320 and +900°F)

Inconel Sheath: -200 and +650°C (-320 and +1200°F)

ASTM Calibration:
Per ASTM E1137-87. Resistance at 0°C (32°F) is as follows (also conform to DIN and IEC calibrations):
- for ASTM-B, 100.00 ± 0.10 _
- for ASTM-A, 100.00 ± 0.05 _

Refer to Technical Information Sheet TI 005-028. Alpha is 0.00385 _/_/°C.

SAMA Calibration:
SAMA Standard RC 21-4-1966. Curves PR 279 (°C) and PR 278 (°F). Alpha is 0.003923 _/_/°C. Resistance of 98.129 ±0.1 _ at 0°C (32°F). Refer to TI 5-27a.

External Pressure: The detector sheath can be exposed to an external pressure of 21 MPa (3000 psi, 210 bar or kg/cm^2) without a change in resistance of more than the amount equivalent to 0.05°C (0.1°F). There will be no permanent change in the resistance at the ice point after this exposure.

Vibration: A detector, with 76 mm (3 in) of its sheathed length unsupported or overhanging, will withstand 250 m/s2 (25 "g") vibration from 20 to 2000 Hz in any axis for 25 minutes without damage.

Physical Specifications

RTD Configurations: See Figure 1. Three configurations are offered. A well-type assembly with a nipple coupler; a well-type assembly with a nipple and union coupler; and a bare element-type assembly. The bare element-type assembly has a hex-head nipple with 1/2 NPT external thread welded on sensor for process mounting and mounting to connection head.

Sensor Type: Single or dual platinum resistance temperature sensor, strain free, fully annealed, with three-lead configuration. Four-wire RTDs are available on request.

Sensor Wires Three leads are color coded white, and two red. White for the one leg of the detector, and the two reds for the two legs to the other side of the detector. Stranded 0.50 mm2 or 22 AWG wire with ptfe insulation.

Sensitive Length: 40 mm (1.6 in) minimum, measured from the closed end.

Internal Insulation: Glass fiber over sensitive length, high-purity aluminum oxide powder packed over remaining length.

Sheath Sealant: Epoxy compound applied at open end of sheath to prevent entry of moisture.

Sheath Outside Diameter (O.D.): 6.35 mm (0.250 in). Note that a well inside diameter (I.D.) of 6.60 mm (0.260 in) is required.

Insertion Length: Refer to Model Code.

Construction: All welded and moisture sealed. 316 ss for temperature up to 480°C (900°F), Inconel 600 for temperatures up to 650°C (1200°F).

Weatherproof/General Purpose Connection Head: The weatherproof/general purpose connection head when used with a well, contains a compression spring to maintain RTD tip contact. Diecast aluminum alloy with O-ring gasketed cover. A 1/2 NPT conduit connection is provided for field wiring to a ceramic terminal block within the connection head. The assembly meets IEC IP65, provides the environmental protection of NEMA Type 4. See Figure 1.

Explosionproof/Flameproof Connection Head: The explosionproof/flameproof connection head is used to protect conductors in conduit systems within hazardous areas. The head contains a compression spring to maintain RTD tip contact. Diecast low copper aluminum alloy, painted, with an O-ring gasketed cover. A 1/2 NPT conduit connection is provided for field wiring to a ceramic terminal block within the connection head. The assembly meets IP66 and provides the environmental and corrosion resistance protection of NEMA Type 4X.

Performance Specifications

Accuracy:

ASTM-A CALIBRATION SENSORS (OPTIONAL HIGH ACCURACY): ±0.13 + 0.0017(T)°C, where T = °C temperature, absolute value. (Better than IEC-A calibration accuracy.)

ASTM-B CALIBRATION SENSORS: ±0.25 + 0.0042(T)°C, where T = °C temperature, absolute value. (Better than DIN and IEC-B calibration accuracy.)

SAMA CALIBRATION SENSORS: ±0.26°C (±0.5°F) or ±0.25% of temperature reading, whichever is larger, for 480°C (900°F) and below; ±0.5% of temperature reading.

Reproducibility:

±0.125°C (±0.25°F) for 480°C (900°F) and below; ±0.25°C (±0.5°F) for above 480°C (900°F).

Operational Stability:

Less than ±0.06°C (±0.1°F) shift from initial calibration in one year.

Response Time:

5 seconds maximum for a 63% recovery; based on a step change in temperature of the bare sensor starting at an ambient room temperature of 25°C (77°F) to being immersed in 100°.

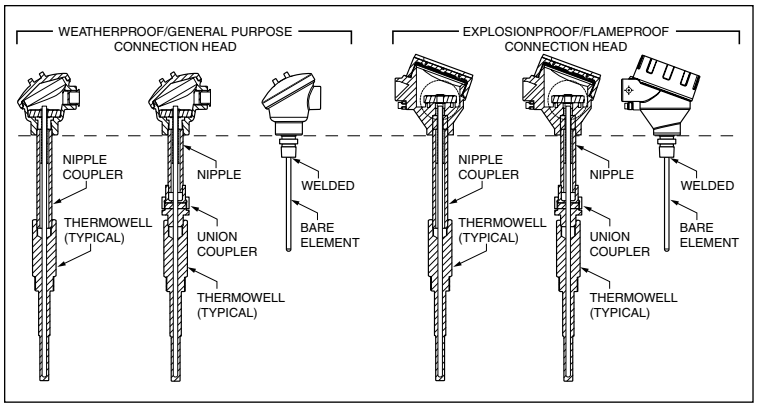

Figure 1

How to Order—Specify model number PR followed by order code for each selection Configuration

Description						
Platinum RTD	PR					
Sensor Type[a]						
Single Element		-1				
Dual Element		-2				
Connection Head[a]						
Weatherproof/General Purpose			3			
Explosionproof and Weatherproof, FM and FMc Approvals[f]			4			
Explosionproof and Weatherproof, CSA Certification[f]			5			
Flameproof and Weatherproof, ATEX Certification[f][g]			6			
Flameproof and Weatherproof, IECEx Certification[f][g]			7			
Construction[a]						
Well Type, Nipple Coupler, steel (for connection to Well)[d]				N		
Well Type, Nipple Coupler, 316 ss (for connection to Well)[d]				P		
Well Type, Union Coupler, steel (for connection to Well)[d][g]				U		
Well Type, Union Coupler, 316 ss (for connection to Well)[d]				W		
Bare Element with 316Lss threaded hex fitting (1/2 NPT external thread) welded on to sensor				B		
Calibration Curve[b]						
ASTM-B (Standard - same as DIN and IEC-B calibration curves)					B	
ASTM-A (High Accuracy selection; same as IEC-A calibration curve)					A	
SAMA - 3-Wire					S	
Sheath - 6.35 mm (0.25 in) O.D.						
316 ss						S
Inconel						I

Length "U" or "U + T" Dimension[c]

51 mm (2.0 in)	-002			
76 mm (3.0 in)	-00A			
90 mm (3.5 in)	-003			
102 mm (4 in)	-004			
127 mm (5 in)	-005			
152 mm (6 in)	-006			
178 mm (7 in)	-007			
203 mm (8 in)	-008			
229 mm (9 in)	-009			
254 mm (10 in)	-010			
279 mm (11 in)	-011			
305 mm (12 in)	-012			
330 mm (13 in)	-013			
356 mm (14 in)	-014			
381 mm (15 in)	-015			
406 mm (16 in)	-016			
432 mm (17 in)	-017			
457 mm (18 in)	-018			
483 mm (19 in)	-019			
508 mm (20 in)	-020			
533 mm (21 in)	-021			
559 mm (22 in)	-022			
584 mm (23 in)	-023			
610 mm (24 in)	-024			
635 mm (25 in)	-025			
660 mm (26 in)	-026			
686 mm (27 in)	-027			
711 mm (28 in)	-028			
737 mm (29 in)	-029			
762 mm (30 in)	-030			
787 mm (31 in)	-031			
813 mm (32 in)	-032			
838 mm (33 in)	-033			
864 mm (34 in)	-034			
889 mm (35 in)	-035			
914 mm (36 in)	-036			
Nonstandard length are whole inches from 37 through 300 inches; specify desired length by substituting numerical values for Xs; e.g., -048 = 48 inches	-XXX			
Optional Selections				
Sensor Length 0.5 in longer than the specified length; (not available with Length Codes 00A or 003)		-H		
Shipped without Thermowell; for customer to install thermowell (e)		-W		
Thermowell other than the Standard -T Series Wells		-X		
Threaded Coupler Options for Bare Elements - Code B				
Packing Type, 1/2 NPT			-T1	
Packing Type, 3/4 NPT			-T2	
Packing Type, 1 NPT			-T3	
Spring Loading Type, 1/2 NPT			-T4	
Spring Loading Type, 3/4 NPT			-T5	
Compression Type, 1/4 NPT			-T6	
Compression Type, 1/2 NPT			-T7	
Calibration Options				
Three Point Calibration with Certificate				-C1
Cryogenic Calibration; -40 to -75°C (-40 to -100°F)				-C2
Cryogenic Calibration; -75 to -130°C (-100 to -200°F)				-C3
Cryogenic Calibration; -130 to -200°C (-200 to -320°F)				-C4

Notes

(a) See Figure 1 and DIMENSIONS-NOMINAL section for RTD assembly configurations.
(b) See Performance Specifications section for Calibration Curve Accuracy.
(c) With a bare sheath assembly, the "U" or "U + T" dimension is identified as the "A" dimension. See Dimensions-Nominal section.
(d) For Well Type construction, the well must be specified separately. Refer to Physical Specifications section.
(e) No Agency electrical safety certifications apply.
(f) Thermowells for Explosionproof/Flameproof atmospheres are only available in the following materials: carbon steel C-1018, 316 ss, 316L ss, 304 ss, 304L ss, Alloy 20 Cb-3, Hastelloy B, Hastelloy C-276, Inconel 600, R-Monel 405, K-Monel 500, Nickel 200, Titanium, and Cr/Moly steels.
(g) ATEX and IECEx, d, not available with Construction Code U, carbon steel union coupler.

MT Series MINOX™ Thermocouples

MINOX Thermocouples are thermocouple wires with mineral insulation lightly compacted about the conductors and encased in a metal sheath. MINOX Assemblies are specified because of their strength, protection against corrosion and contaminating atmospheres, and ability to be spring loaded to ensure tip contact at well bottom. The output from the element may be directly connected to a variety of thermocouple temperature measuring instruments.

Performance Specifications

Accuracy[a]

Thermocouple Type	Temperature Range [b] °C	°F	Tolerance [c] (Percentages Expressed are of Reading)
K	-200 to 0 0 to 1250	-328 to +32 32 to 2300	±2.2°C or ±2.0% ±2.2°C or ±0.75%
N	-200 to 0 0 to 1250	-328 to +32 32 to 2300	±2.2°C or ±2.0% ±2.2°C or ±0.75%
J	0 to 750	32 to 1400	±2.2°C or ±0.75%
E	-200 to 0 0 to 900	-328 to +32 32 to 1600	±1.7°C or ±1.0% ±1.7°C or ±0.5%
E	-200 to 0 0 to 350	-328 to +32 32 to 700	±1°C or ±1.5% ±1°C or ±0.75%

Notes
(a) Conforms to ANSI MC 96.1.
(b) See Standard Specifications section for temperature limits with different MINOX assembly configurations.
(c) Whichever is greater. The "percent of reading" limit of error applies to the °C temperature only.
To determine the error in °F, multiply the °C error by 1.8.

Standard Specifications

MINOX Thermocouple Configurations: Three configurations are offered. A well-type assembly with a nipple coupler; a well-type assembly with a nipple and union coupler; and a bare element-type assembly. The bare element-type assembly has a hex-head nipple with 1/2 NPT external thread welded on sensor for process mounting and mounting to connection head. See Figure 1.

Sensor Type: Single or Dual Element

Temperature Limits: The maximum temperature limit is determined by the lowest upper range limit (URL) of the element, connection head, or sheath.

ELEMENT: Refer to Performance Specifications table above.

CONNECTION HEAD: -40 and +105°C (-40 and +220°F)

316 SS SHEATH: -200 and +870°C (-320 and +1600°F)

INCONEL SHEATH: -200 and +1150°C (-320 and +2100°F)

Calibration: ANSI MC 96.1, Types K, N, J, E, or T, as specified.

Grounded Measuring Junction: The thermocouple wires are welded to the internal surface of the sheath tip.

Isolated Measuring Junction: Thermocouple wires are electrically insulated from the sheath. Recommended for most applications.

Insertion Length, A, U, or U +T: 90 to 914 mm (3.5 to 36 in) standard; nonstandard lengths to 7.6 in (300 in) available, see Model Code, and Dimensions-Nominal sections.

Sensitive Length: 40 mm (1.6 in) minimum, measured from closed end.

Sheath Sealant: Epoxy compound applied at open end of sheath to prevent entry of moisture.

Sheath Outside Diameter (O.D.): 6.35 mm (0.250 in). Note that a well inside diameter (I.D.) of 6.60 mm (0.260 in) is required.

Internal Insulation: Glass fiber over sensitive length; high-purity aluminum oxide powder over remaining length.

Construction: All welded and moisture sealed, 316 ss for temperature up to 870°C (1600°F), and Inconel 600 for temperatures up to 1150°C (2100°F).

Wiring: Refer to Figure 2 for terminal block configuration.

Figure 1

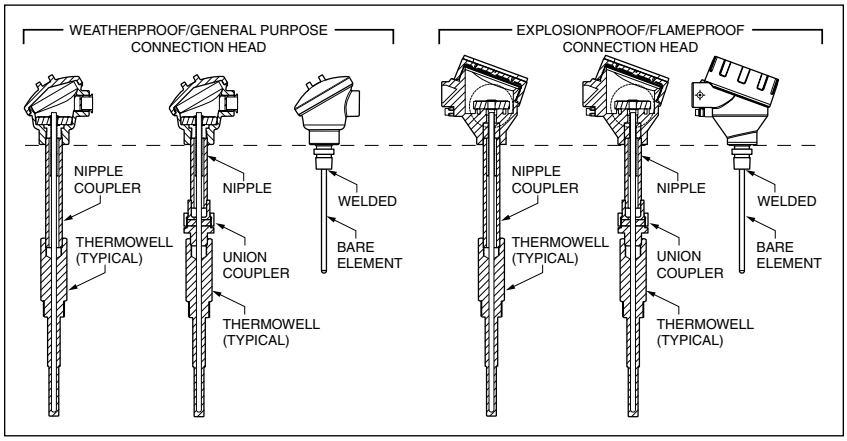

How to Order

Description						
MINOX Thermocouple	MT					
Sensor Type[a]						
Single Element		-1				
Dual Element		-2				
Connection Head[a]						
Weatherproof/General Purpose			3			
Explosionproof and Weatherproof, FM and FMc Approvals[f]			4			
Explosionproof and Weatherproof, CSA Certification[f]			5			
Flameproof and Weatherproof, ATEX Certification[f][g]			6			
Flameproof and Weatherproof, IECEx Certification[f][g]			7			
Construction[a]						
Well Type, Nipple Coupler, steel (for connection to Well)[d]				N		
Well Type, Nipple Coupler, 316 ss (for connection to Well)[d]				P		
Well Type, Union Coupler, steel (for connection to Well)[d][g]				U		
Well Type, Union Coupler, 316 ss (for connection to Well)[d]				W		
Bare Element with 316Lss threaded hex fitting (1/2 NPT external thread) welded on to sensor				B		
Thermocouple Type[b]						
Type E					E	
Type J					J	
Type K					K	
Type N					N	
Type T					T	
Measuring Junction						
Isolated						I
Grounded (Earthed) - Not with Type T Thermocouple						G
Sheath - 6.35 mm (0.25 in) O.D.						
316 ss							S
Inconel							I

Length "U" or "U + T" Dimension[c]

51 mm (2.0 in)	-002
76 mm (3.0 in)	-00A
90 mm (3.5 in)	-003
102 mm (4 in)	-004
127 mm (5 in)	-005
152 mm (6 in)	-006
178 mm (7 in)	-007
203 mm (8 in)	-008
229 mm (9 in)	-009
254 mm (10 in)	-010
279 mm (11 in)	-011
305 mm (12 in)	-012
330 mm (13 in)	-013
356 mm (14 in)	-014
381 mm (15 in)	-015
406 mm (16 in)	-016
432 mm (17 in)	-017
457 mm (18 in)	-018
483 mm (19 in)	-019
508 mm (20 in)	-020
533 mm (21 in)	-021
559 mm (22 in)	-022
584 mm (23 in)	-023
610 mm (24 in)	-024
635 mm (25 in)	-025
660 mm (26 in)	-026
686 mm (27 in)	-027
711 mm (28 in)	-028
737 mm (29 in)	-029
762 mm (30 in)	-030
787 mm (31 in)	-031
813 mm (32 in)	-032
838 mm (33 in)	-033
864 mm (34 in)	-034
889 mm (35 in)	-035
914 mm (36 in)	-036
Nonstandard length are whole inches from 37 through 300 inches; specify desired length by substituting numerical values for Xs; e.g., -048 = 48 inches	-XXX

Optional Selections

Sensor Length 0.5 in longer than the specified length; (not available with Length Codes 00A or 003)	-H
Shipped without Thermowell; for customer to install thermowell[e]	-W
Thermowell other than the Standard -T Series Wells.	-X

Threaded Coupler Options for Bare Elements - Code B

Packing Type, 1/2 NPT	-T1
Packing Type, 3/4 NPT	-T2
Packing Type, 1 NPT	-T3
Spring Loading Type, 1/2 NPT	-T4
Spring Loading Type, 3/4 NPT	-T5
Compression Type, 1/4 NPT	-T6
Compression Type, 1/2 NPT	-T7

Calibration Options

Three Point Calibration with Certificate	-C1
Cryogenic Calibration; -40 to -75°C (-40 to -100°F)	-C2
Cryogenic Calibration; -75 to -130°C (-100 to -200°F)	-C3
Cryogenic Calibration; -130 to -200°C (-200 to -320°F)	-C4

Notes

(a) See Figure 1 and DIMENSIONS-NOMINAL section for RTD assembly configurations.
(b) See Performance Specifications section for Calibration Curve Accuracy.
(c) With a bare sheath assembly, the "U" or "U + T" dimension is identified as the "A" dimension. See Dimensions-Nominal section.
(d) For Well Type construction, the well must be specified separately. Refer to Physical Specifications section.
(e) No Agency electrical safety certifications apply.
(f) Thermowells for Explosionproof/Flameproof atmospheres are only available in the following materials: carbon steel C-1018, 316 ss, 316L ss, 304 ss, 304L ss, Alloy 20 Cb-3, Hastelloy B, Hastelloy C-276, Inconel 600, R-Monel 405, K-Monel 500, Nickel 200, Titanium, and Cr/Moly steels.
(g) ATEX and IECEx, d, not available with Construction Code U, carbon steel union coupler.

Thermowells

Foxboro Thermowells separate the temperature-measuring sensitive portion of thermocouple, or resistance temperature detector from a potentially corrosive. These wells permit ready removal of the sensor without process shutdown.

Proven Dependability
Foxboro Thermometer Wells have been a widely accepted standard of the process control industry for over sixty years. Many thousands of successful, trouble-free installations have demonstrated the exceptional dependability of these wells.

High Quality Construction
Invensys Foxboro offers thermowells made to accept standard or custom temperature sensors. Wells are machined from industry standard 316 ss, and a polished finish assures maximum corrosion resistance. All wells are manufactured in accordance with applicable ASME (PTC - Performance Test Code), ASTM, and ANSI standards.

Special Sanitary Construction
The Model TS Sanitary Well is further polished to a finish exceeding Ra 32 microinches, and the 3A number 4 finish. This provides a surface free of bacteria-harboring surface irregularities.

Numerous Configurations Available
A selection of straight, tapered, or stepped shank wells is offered. U-lengths range from 2 to 36 in (51 to 914 mm), and lagging lengths range from 2 to 4 in (51 to 102 mm). The process connection can either be an ANSI Class 150, 300, or 600 flange, a 1/2, 3/4, or 1 NPT external thread, a 1.05-, 1.315-, or 1.5-inch O.D. Well connection for socket- welding, or a 1-, 1 1/2-, or 2-inch Tri-Clamp. A 1/2 in internal NPSM thread is provided on all well heads for sensor entry.

Total Temperature Solutions
Invensys Foxboro is your single point of contact for world class process temperature measurement and control. We offer a complete line of temperature transmitters, sensors, thermowells, connection heads, controllers, and recorders to meet all of your requirements. Let us make this process easy for you.

Dimensions
Refer to Dimensions sections and table below.

Thermowell Model	Dimensional Print
Model TF	DP 002-110
Model TT	DP 002-112
Mode TW	DP 002-113
Model TS	DP 002-111

For complete specifications please refer to Foxboro's PSS3-3D1A.

How to Order – Specify Model TW or TS Model Code

Model TW Weld-In Wells

Description	Model
Weld-In Well	TW
Internal Diameter	
0.260 in (6.6 mm)	-2
Material	
316 ss	C
Process Connection Size	
Nominal 3/4-inch Pipe (Socket Weld) 1.05-inch O.D. Well Connection	B
Nominal 1-inch Pipe (Socket Weld) 1.315-inch O.D. Well Connection	C
1.5-inch Diameter, Weld-in	D
Shank Type	
Straight	2
Stepped[a]	3
Tapered	4
Insertion Length U[b]	
2.0 in (51 mm)	020
2.5 in (64 mm)	025
3.0 in (76 mm)	030
3.5 in (89 mm)	035
4.0 in (102 mm)	040
4.5 in (114 mm)	045
5.0 in (127 mm)	050
5.5 in (140 mm)	055
6.0 in (152 mm) to 36 in in 0.5 in increments (to 914 mm in 12.7 mm increments)	060
36.0 in (914 mm)	360
Lagging Length T	
0.0 (None)	00
2.0 in (51 mm)	20
2.5 in (64 mm)	25
3.0 in (76 mm)	30
3.5 in (89 mm)	35
4.0 in (102 mm)	40

Model TS Sanitery Wells

Description	Model
Sanitary Well	TS
Internal Diameter	
0.260 in (6.6 mm)	-2
Material	
316 ss	C
Process Connection Size	
1-inch Tri-Clamp	C
1 1/2-inch Tri-Clamp	D
2-inch Tri-Clamp	E
Shank Type	
Straight	2
Stepped[a]	3
Tapered	4
Insertion Length U[b]	
2.0 in (51 mm)	020
2.5 in (64 mm)	025
3.0 in (76 mm)	030
3.5 in (89 mm)	035
4.0 in (102 mm)	040
4.5 in (114 mm)	045
5.0 in (127 mm)	050
5.5 in (140 mm)	055
6.0 in (152 mm) to 36 in in 0.5 in increments (to 914 mm in 12.7 mm increments)	060
36.0 in (914 mm)	360
Lagging Length T	
0.0 (None)	00
2.0 in (51 mm)	20
2.5 in (64 mm)	25
3.0 in (76 mm)	30
3.5 in (89 mm)	35
4.0 in (102 mm)	40

Example: TW-2CB203020

(a) Stepped shanks are only available with U length codes 030 to 360 (U-lengths > 2.5 in or > 64 mm).

(b) U length is from the raised face of the flange to the well tip.

Dew Point Measurement System–DEWCEL

The DEWCEL is used with RTD, thermocouple, or filled thermal system temperature measuring equipment.

For complete specifications, refer to Product Specification Sheet PSS 1-5A1 A.

Specifications

Accuracy: ±0.8°C (±1.5°F) at 32°C (90°F) dew point (not including temperature sensor tolerances).

Dew Point Range Limits: -45 and +60°C (-50 and +140°F).

Relative Humidity Limits: 12 and 100% relative humidity.

Pressure Rating: Zero Pa absolute to 865 kPa gauge (zero psia to 125 psig)

- The DEWCEL System provides a direct reading of absolute humidity in ambient temperature between-45 and +105°C (-50 and +220°F).
- When connected to a temperature measurement device, the DEWCEL System measures absolute humidity. By means of appropriate tables, the temperature can be converted to dew point,percent water vapor, parts per million, or other units of absolute moisture. In practice,the conversion is accomplished in recorder chart layouts, characterized amplifiers, or computer programs.

The following chapter contains Product Specifications of the Instruments:

PC50	PC-Based Configurator for Foxboro Intelligent Transmitters (FDT technology)
475	HART Hand-held Communicator
HHT50	Maintenance Tablet

Model PC50 Field Device Tool for Use with Intelligent Field Devices with FoxCom™ or HARTÆ Communication Protocol

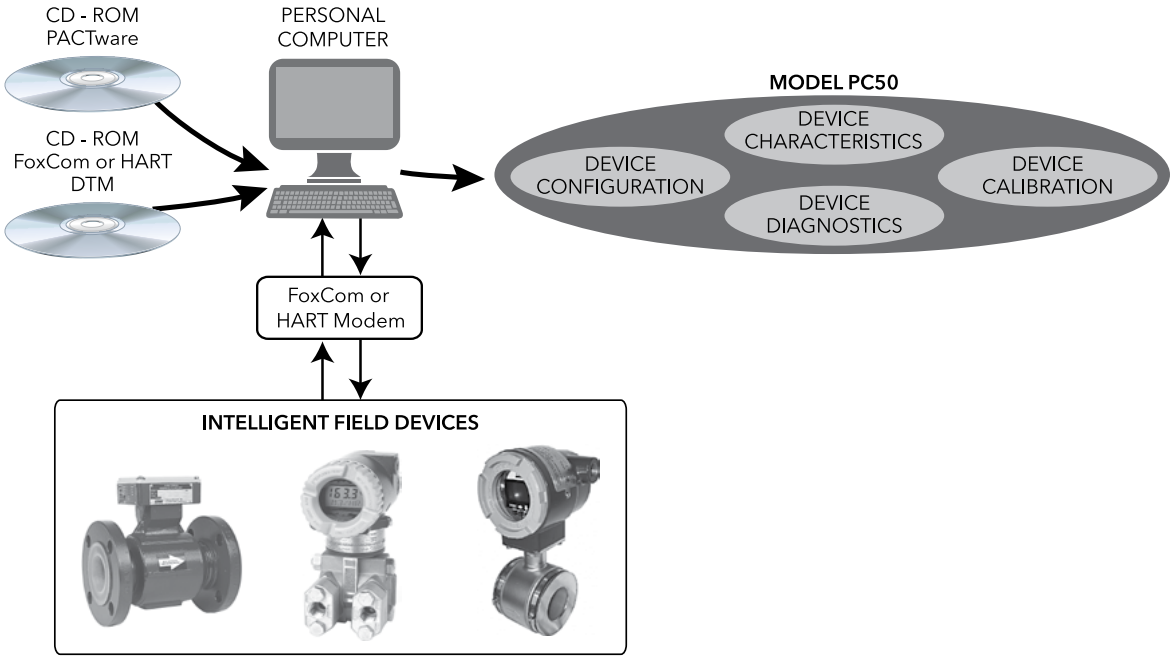

The Model PC50, a powerful Windows® 2000 and Windows XP[1] based software and hardware package with external modem(s), provides bidirectional communication with devices having FoxCom or HART communication protocol. For complete specifications, refer to Product Specification Sheet PSS 2A-1Z3G.

Features

- *The Model PC50 Field Device Tool (FDT) supports Invensys Foxboro intelligent transmitters and positioners.*
- *FDT is also an open tool for integratiion with third party Device Type Managers(DTMs).*
- *End users have freedom of choice in their selection of field devices from multiple vendors.*
- *Other protocols supported by FDT technology.*
- *Device configuration, device calibration, device diagnostics, and device characteristics.*
- *Capability to reconfigure, copy, clone, upload, download, and print out device databases.*
- *The Model PC50 Field Device Tool conforms to the FDT Specification which provides a standard mechanism for communication between applications and devices.*

Optional Modem and Power Supply

A modem is required for communication between the intelligent field device and the FDT software installed in the PC. An optional FoxCom or HART modem kit is offered for a user who may not already have one installed. Also, an optional power supply is offered for users who need to power the device.

Note

1 Invensys Foxboro has tested and validated the software on Wondows XP.

System Operation

The system relies on vendor-created device definitions (DTMs – Device Type Managers). For Invensys Foxboro devices with FoxCom or HART protocol, DTMs are provided as configurable software on a FoxCom or a HART CD-ROM.

Invensys Foxboro CD-ROMs include:

- PACTware™ Frame Application
- Invensys DTMs
- Communication DTMs
- Instructions

PACTware (Process Automation Configuration Tool) is a program designed to combine communication-capable field devices of different manufacturers. In accordance with the FDT Specification, PACTware is used as a frame application for DTMs. The frame provides the navigation tree, menu structure, device storage, and instrument database storage.

Invensys Foxboro DTMs will:

- Allow configuration of the device
- Communicate the device health to the user
- Perform device diagnostics
- Allow calibration of the device
- Support FDT interfaces providing parameter information and access using XML files

A Communication DTM provides the field connectivity needed by a device DTM. Support for connectivity is provided through a FoxCom or HART modem.

How to Order — Specify model number PC50 followed by order code for each selection

Communication Protocol[a]				
FoxCom and HART (FoxCom and HART DTM CD-ROMs)	B			
Language				
English		E		
Additional Software				
Not Applicable			0	
Optional Selections				
FoxCom Modem & Cable Kit				D
HART USB Modem & Cable Kit				H
Power Supply for Transmitter[b]				C
HART Serial DB9 Modem & Cable Kit				T
USB-To-Serial Cable[c]				U

(a) The Model PC50 FDT includes a PACTware CD-ROM, in addition to the DTM CD-ROM(s) selected under communication protocol.
(b) Power supply for transmitter is a 120 V ac 60 Hz-to-24 V dc converter; for use during calibration and configuration.
(c) Also available as a separate part by ordering P/N D0186XC. Allows PC50 (Version 2.0) to communicate via USB port to serial modem.

Model 475 Field Communicator

The Model 475 Field Communicator is an intrinsically safe handheld configurator that uses the Windows CE operating system. It is loaded with all HART DDs that have been successfully tested and registered with the HART Foundation. Users can install new DDs using the Easy Upgrade feature.

Specifications

- ✔ Model 475 includes color LCD display, stylus and straps, leadset with connectors, resource CD, carrying case, and instructions.
- ✔ Easy upgrade feature allows system and DD upgrades by accessing a web site. User PC requires an IrDA port or an adapter (refer to Note b).

How to Order — Specify model number 475 followed by order code for each selection

Communication Protocol								
HART (d)	H							
HART and FOUNDATION Fieldbus[a]	F							
Battery Type								
Rechargeable Li-ion Battery Pack		P						
Power Supply/Charger								
Power Supply/Charger (Li-ion/NiMH, US/UK/EU connection types included)			1					
Language								
English				E				
Product Certifications								
ATEX, FM, CSA and IECEx Intrinsically Safe (includes FISCO as applicable)					KL			
INCLUDED OPTIONS								
Graphics and Device Configuration Management [c]						GM		
BLUETOOTH								
Bluetooth Communication[d]							T	
Easy Upgrade								
Easy Upgrade Feature for 3 years of upgrades[b]								U
Options								
Spare Rechargeable Li-Ion Power Module[e]								A
Enclosures Protective Rubber Boot with Stand								S

Notes

(a) Invensys Foxboro cannot provide upgrade service. Units must be returned to Emerson for upgrading.
(b) The Easy Upgrade feature allows the user to add new System Application software and device descriptions (DDs) to the 475 for a period of 3 years.
(c) Graphics enables a user to access enhanced graphical features when using the HART & FOUNDATION fieldbus application. Device Configuration Managementprovides the capability to store up to 1000 configurations and print them using the Easy Upgrade Utility.
(d) Bluetooth enables communication to a PC via the Bluetooth protocol. See list of countries with Bluetooth approval at www.fieldcommunicator.com. Not available in all countries.
(e) A fully charged Li-ion Power Module is capable of delivering power for 20 hours of typical field use. If requirements exceed this specification, a spare Power Module (Option A) should be specified.

HHT50 Maintenance Tablet

The Foxboro Maintenance Tablet is the industry's first field configuration tool incorporating FDT technology into a rugged tablet PC. It furnishes unprecedented flexibility and functionality in a portable device. This breakthrough unit combines Invensys PC50 2.0 configuration software with industry standard Field Device Tool software. So the Maintenace Tablet can configure any intelligent field device compatible with HART or FoxCom communications. And unlike handheld devices limited to the Windows CE operating system, the Maintenace Tablet runs powerful programs of the user's choice on a full Windows XP platform. The unit features USB and Ethernet port connections. Using proper accessories, it shares data with a laptop, PC, or network, allowing remote access and troubleshooting.

Features/Benefits

- Breakthrough flexibility, functionality, durability
- Optimal price/value ratio
- Versatile use with any FDT-compliant device using HART or FoxCom
- Full Windows XP Tablet PC operating system
- USB and Ethernet connectivity for data sharing
- Design fully ruggedized to military standards
- Compact 8.5 x 11 inch form factor
- Bright 10.4 inch color LED backlit display
- Functional accessories including cables, modems, and "grab and go" docking station
- Carrying case / backpack are standard items

How to Order — Specify model number HHT50 followed by order code for each selection

Additional Software					
PCMV Configurator (for Models IMV25, IMV30, IMV31, with FoxCom or HART) (a)	S1				
PCMM Configurator (for Model IMV25-M - Modbus)[a]	S2				
Modems					
FoxCom Modems; complete with USB-to-DB9 Adapter		M1			
HART Modem; complete with USB-to-DB9 Adapter[b]		M2			
RS485 Converter for use with PCMM and IMV25-M (Modbus) Only		M3			
HART USB Modem and Cable Kit		M4			
CD-ROM Drive and Docking Station					
Omit External CD-ROM Drive			D1		
Omit External CD-ROM Drive, and Add Docking Station with internal CD-ROM Drive			D2		
Power Cords (North American Power Cord is standard)					
European Power Cord (c)				P1	
United Kingdom (UK) Power Cord[d]				P2	
Miscellaneous Options					
Spare Battery					B
Screen Protectors					G
Power Supply for Transmitter[e]					C
USB-to-DB9 Adapter[f]					U

Notes

(a) PC50 software, complete with both foxCom and HART DTMs, is standard.
(b) This 9-Pin HART Modem is REQUIRED when using PC20 or PCMV Software.
(c) European power cord for Germany, Finland, France, Austria, Begium, Denmark, Greece, Iceland, Italy, Netherlands, Norway, Poland, Portugal, and Sweden.
(d) UK power cord for also for Ireland and certain Middle Eastern, Asian, and African countries.
(e) Power supply for transmitter is a tool that requires 120 Vac, 60 Hz and supplies 24 Vdc for use during configuration.
(f) For use with existing Foxboro modems that do not have a USB adapter. Also available as a separate part by ordering P/N D0186XC.

The following chapter contains Product Specifications of the Instruments:

875	Series Intelligent Electrochemical Line-powered Analyzer for pH/ORP, Contacting Conductivity/Resistivity, or Electrodeless Conductivity
873	Series Electrochemical Analyzers for pH/ORP, Contacting Conductivity, Electrodeless Conductivity, Dissolved Oxygen, and Resistivity Measurement
876	Series Intelligent Electrochemical Two-wire Transmitters for pH/ ORP/ISE, Electrodeless Conductivity and Contacting Conductivity and Resistivity Measurement
871CC	Series Contacting Conductivity/Resistivity Sensor
871CR	Series Contacting Conductivity/Resistivity Sensor
871DO	Series Dissolved Oxygen Sensors
871A	Series pH and ORP Sensors
871PH	Series pH and ORP Sensors
PH10	DolpHin Series pH
ORP10	DolpHin ORP Sensors
PH12	Series pH Sensors
EP462A	Pure Water pH Sensors
EP460, EP466	Special Purpose pH Sensors
871EC	Series Electrodeless Conductivity Sensors
871FT	Series Non-invasive Sanitary and Industrial Flow-through Electrodeless Conductivity Sensor
FT10	Series Non-invasive, Non-metallic Flow-through Electrodeless Conductivity Sensor

875 Series Intelligent Electrochemical Line-powered Analyzer for pH/ORP, Contacting Conductivity/Resistivity, or Electrodeless Conductivity

These Microprocessor-based, line-powered intelligent analyzers, when used with compatible Foxboro sensors, provide high accuracy measurement indication, output and alarming capability for pH, ORP, conductivity or resistivity. A human interface guides the user through intuitive, menu-driven configuration, calibration, status, and diagnostic procedures. A history log provides a report for up to 100 time and date stamped events. PSS 6-1A1 E, 6-3A1 B or 6-3M C.

- Easy to Use
- Sensor and analyzer diagnostics
- Self-prompting Calibration Routines
- Dual 4 to 20 mA outputs and dual alarms
- Digital HART Communication
- RS-232 port and Windows-based configuration utility
- NEMA 4X field enclosure or panel mount with NEMA 4X front display
- pH/ORP/ISE Version
  - ✓ *Compatible with Fluoride and pH/ORP sensors*
- EC Version
  - ✓ *Conductivity or Concentration Measurement*
  - ✓ *Up to three distinct applications, either standard or custom, may be programmed and autoswitched*
- CR Version
  - ✓ *Dual sensor inputs*
  - ✓ *Resistivity and/or conductivity measurement*

Functional Specifications

Analyzer Type	Measurement Range	Minimum Output Span Limit	Temperature Inputs	Power Requirements
pH/ORP	pH: -2 to 16pH ORP: -2000 to +2000mV ISE: 0-9999ppm	5% of scale chosen	100 ohm PT RTD 1000 ohm Pt RTD 3K ohm Balco RTD	24, 100, 120, 220, 240 Vac. 50 or 60 Hz. 24 Vdc
EC	0 to 50 µS/cm min 2000 mS/cm max	5% of scale chosen	100 ohm PT RTD 1000 ohm Pt RTD	24, 100, 120, 220, 240 Vac. 50 or 60 Hz. 24 Vdc
CR	Resistivity 0, 1 to 20Mohm.cm Conductivity 0-1 µS/cm to 0-20 mS/cm	5% of scale chosen	100 ohm PT RTD 1000 ohm Pt RTD 100K Thermistor	24, 100, 120, 220, 240 Vac. 50 or 60 Hz. 24 Vdc

Accuracy	Repeatability	Temperature	Electromagnetic Compatibility
Digital: pH ± .1% full scale Analog: pH ± .15% full scale	pH: ± .1% full scale	**Temp Limits:** -10 to 65°C **Ambient Temp effect /°C :** Digital: ± 0.05% of full scale Analog: ±0.05% of full scale	Compliant with EMC Directive 89-336-EEC When used as specified
Digital: EC ± .5% full scale Analog: EC ± .55% full scale	EC: ± .1% full scale		
Digital: CR ± .1% full scale Analog: CR ± .15% full scale	CR: ± .1% full scale		

How to Order—Specify model number 875 followed by order code for each selection

Specify Model Number

For pH, ORP, or ISE	PH
For Electrodeless Conductivity Measurement	EC
For Contacting Conductivity or Resistivity	CR

Supply Voltage or Frequency

120V ac, 50 or 60 Hz	-A
220V ac, 50 or 60 Hz	-B
240V ac, 50 or 60 Hz	-C
24V ac, 50 or 60 Hz.	-E
100Vac, 50 or 60 Hz	-J
24vdc[7]	-D

Enclosure Mounting

Panel Mounting	1
Field Mounting to a DN50 or 2 inch pipe	2
Field mounting to a surface	3
Pipe, Reinforced[3]	4

Electrical Safety[1]

Factory Mutual certified for ordinary & Div 2 Locations, n[2]	F
CSA certified for ordinary & Div 2 Locations, n[2]	C
UL Ordinary locations.	U
ATEX Protection "n" for Zone 2; II, 3, G; EEx nc IIC	N
IEC Ex non-sparking, gas group IIC, Zone 2	D

Options

Storm Door	-A
Digital HART Communication and 4 to 20 mA output	-C
Configurator utility (IBM/PC-AT Software)	-F
Rugged Construction, passed shock + vibration testing, and provides 4-20 mA outputs [4,5,6]	N
Rugged Construction, passed shock + vibration testing, and provides 0 to 10 V dc outputs [4,5,6]	P

Specify Sensor Type:

pH: glass or antimony, ORP or ISE (fluoride)

EC (SP, HP, LB, UT, RE, BW, PP, PT, NL, TF, EV or 871FT and FT10 flow-through model

CR /Sensor cell factor/0.1cm^{-1}, 10cm^{-1} or other (both channels)

Specify Measurement Range and Units of Measurement (CR; both channels)

Analog Output Range (two outputs)

Specify Temperature Compensation Element:

875PH: 100 ohm PT RTD (2 or 3 wire), 1000 ohm Pt RTD (2 or 3 wire), 3K ohm Balco RTD

875EC: 100 ohm PT RTD (2 or 3 wire), 1000 ohm Pt RTD (2 or 3 wire), 100K Thermistor

875CR: 100 ohm PT RTD (2 or 3 wire), 1000 ohm Pt RTD (2 or 3 wire), 100K Thermistor

Specify Temperature Compensation

User Tag and Application

Notes

1 The 875 has been designed to meet the electrical safety descriptions listed above. For detailed information, or status of testing laboratory approvals or certifications, contact Foxboro.
2 Panel Mounted unit must be installed as follows: For Ordinary, Class I, Division 2 location; install in a protective enclosure to prevent accessibility to live parts. For Class II, and Class iii, Division 2 locations; install in a dust-tight enclosure.
3 Typically selected with 'N' option
4 Only available with supply volyage 'A'
5 Only available with mounting configuration '4'
6 Only available with safety configuration 'F'
7 Provides a volt dc four-wire analyzer

873 Series Electrochemical Analyzers for pH/ORP, Contacting Conductivity, Electrodeless Conductivity, Dissolved Oxygen, and Resistivity Measurement

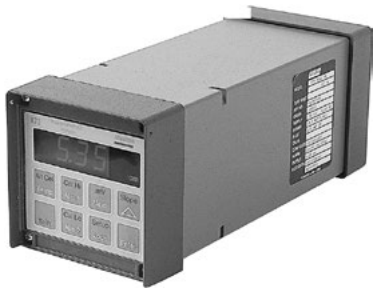

- Dual Sensor Input
  - *contacting conductivity, resistivity, DPX, and dissolved oxygen versions can accept either one or two sensor signals*
  - *pH and EC versions accept one sensor*
  - *allows for ratio and "% rejection" measurements*
  - *both sensor measurements may be retransmitted*
- Low-Cost Analyzer
  - *molded Noryl enclosure provides a compact, full function, panel-mounted package*
  - *wide range capability built in*
  - *ideal for OEM applications*
  - *low-cost pH, contacting conductivity, electrodeless conductivity, resistivity, and dissolved oxygen versions are available*
- ¼ DIN NEMA 4X Housing
  - *cast aluminum enclosure is epoxy coated and suitable for either panel, pipe, or surface mounting*
  - *the 92 x 92 mm (3.6 x 3.6 in) panel cutout uses minimal panel space*

Performance Specifications:

Accuracy: [1]
pH/ORP: ±0.1%
All others: ±0.5% of calibrated range

Repeatability: ±0.1%

Note
1 Reported as % of full scale used.

The 873 Series Electrochemical Analyzers, when coupled with 871 Series and PH10 Series Sensors, measure pH, ORP, conductivity, resistivity, or dissolved oxygen. For complete specifications, refer to Product Specification Sheet 6-1C1 E.

Functional Specifications

Output signal: Isolated, 4 to 20 mA dc, 0 to 20 mA dc, or 0 to 10 V dc, as specified.

Measurement Ranges and Span Limits:

Analyzer Type	Measurement Ranges	Minimum Output Span Limits
pH/ORP	pH -2 to +16 ORP -999 to +1400 mV	
DPX	-2 to +16 pH ORP -999 to 1400 mV ISE 0-2.000 ppm to 0-2000 ppm	
Resistivity	0 to 2 Mohm-cm minimum 0 to 20 Mohm-cm maximum	10% of Upper Measurement Range Value
Contacting Conductivity	0 to 1 µS/cm minimum 0 to 20,000 µS/cm maximum	10% of Upper Measurement Range Value
Electrodeless Conductivity	0 to 50 µS/cm minimum 0 to 2000 mS/cm maximum	10% of Upper Measurement Range Value
Dissolved Oxygen	0 to 100 ppm 0 to 100% saturation	10% of Upper Measurement Range Value

Light Emitting Diode (LED) Readout: 4 digits. Measurement Value: pH, mV, ppm, Mohm-cm, µS/cm, mS/cm, % (as applicable)

Temperature: Celsius (C°) or Fahrenheit (F°), depending on configuration

Alarms: Standard dual, setpoint adjustable zero to full scale; adjustable hysteresis is 0 to 99% of maximum upper measurement range value or dual feed, delay and trigger timers adjustable 0.00 to 99.99 minutes.Contacts rated 5A noninductive at 125 V ac, 30 V dc

Physical Specifications

Mounting:
General Purpose Enclosure: Panel Mounting only.
Field: (NEMA 4X) enclosure.
Panel, pipe, surface, or movable surface mounting

Housing:
General Purpose Enclosure: Molded, glass filled Noryl with NEMA 12 front panel.
Field: (NEMA 4X enclosure)—cast and extruded aluminum, coated with epoxy-based paint

* Actual measurement range 0-20.0 ppm with 871D0 sensor

How to Order—Specify model number 873 followed by order code for each selection

Analyzer					
pH and ORP	PH				
Resistivity	RS				
Contacting Conductivity	CC				
Electrodeless Conductivity	EC				
Dissolved Oxygen	DO				
Dual pH/ORP/ISE	DPX				
Supply Voltage and Frequency: 50/60 Hz					
120 V ac		A			
*220 V ac		B			
*240 V ac		C			
24 V ac		E			
100 V ac		J			
Measurement Output: Isolated					
4 to 20 mA dc			I		
0 to 10 V dc			T		
0 to 20 mA dc			E		
Enclosure					
General Purpose (Molded Noryl) Panel Mount				P	
Field-Mounted (Metal) Panel Mount				W	
Field-Mounted (Metal) Surface Mount				X	
Field-Mounted (Metal) Pipe Mount				Y	
Field-Mounted (Metal) Movable Surface Mount				Z	
Electrical Certification					
CSA, Division 2 A, E, and J only. Not available with Enclosure P					CNZ
Factory Mutual Certified for General Purpose Locations					FGZ
Factory Mutual Certified Nonincendive for Class I, Division 2, Groups A, B, C, and D; and suitable for Class II, Division 2 Groups F and G hazardous locations. Not available with Enclosure P					FNZ
Options					
Curve Generation Program (EC & CC versions only)					5
Storm Door					7

Specify Sensor Type:

pH: pH, ORP, antimony

DPX: pH, ORP, ISE (both channels)

EC: SP, HP, LB, UT, RE, BW, PP, PT, NL, TF, EV, or Complete 87IFT Model Code

CC: 0.1/cm CF or 10/cm CF

Specify Measurement Range (Full Scale) with Measurement Units

Specify Temeperature Element:

EC: 100 K Thermistor or 100 ohm RTD

CC: 100 Kohm Thermistor or 100 ohm RTD

RS: 100 Kohm Thermistor or 100 ohm RTD

Specify Temerature Compensation (EC only)

Specify User Tag and Application

*220 and 240 V ac have CE certification.

876 Series Intelligent Electrochemical Two-wire Transmitters for pH/ORP Contacting Conductivity/Resistivity & Electrodeless Conductivity Measurement

These 2-wire intelligent transmitters, when coupled with applicable sensors, provide measurement indication and an output of HART digital signal and 4 - 20 mA analog for recording or control of pH/ORP, contacting conductivity/resistivity, or electrodeless conductivity. Their human interfaces and online diagnostics provide local configuration, calibration, status and troubleshooting. PSS 6-1A4 A, 6-3N3 A, and 6-3A2A

- Sensor and Transmitter Diagnostics
- Self-prompting Calibration Routines
- 4 to 20 mA and/or Digital
- Intrinsically Safe Construction
- Remote Configuration via HART
- Save and Restore Configuration
- pH/ORP Version
  - ✔ *Compatible with Preamplified or Unamplified pH/ORP Sensors*
  - ✔ *Compatible with fluoride sensor EP459A*
- EC Version
  - ✔ *Conductivity or Concentration Measurement*
  - ✔ *Up to Three Distinct Applications, either standard or custom. May be Programmed and Autoswitched.*
- CR Version
  - ✔ *Conductivity or Resistivity Measurement*
  - ✔ *High Accuracy*

6

Performance Specifications

Accuracy:

876PH	+/-0.009 pH with 3-wire, 1000 ohm RTD
876EC	+/-1% of absolute reading within specified range for sensor
876CR	+/0.5% of absolute reading over the input range of 40Ω to 10MΩ

Stability (After 6 Months)

876PH	+/-0.009 pH with 3-wire, 1000 ohm RTD
876EC	Twice the absolute measurement accuracy value
876CR	Twice the absolute measurement accuracy value

NAMUR Compliance

NAMUR NE 43 for analog overrange and underrange
NAMUR NE 21 for interference immunity requirements

Electromagnetic Compatibility (EMC)

Complies with European EMC Directive 2004/108/EC by conforming to EN 61326-1:2006

Measurement Range (Selectable)

876PH	-2 to +16pH
	-2000 to +2000 mV ORP
	0 to 9999 ppm ion Selective Electrode concentration

Display Format (Selectable)	
876EC	From 9.999 uS/cm to 9999mS/cm Available display format depends on sensor type and units of measurement selected
Display Format (Selectable)	
876CR	0.9999 uS/cm to 9999mS/cm 0.9999 Megohm-cm to 99.99 Megohm-cm Available display format depends on cell factor and units of measurement selected
Temperature Inputs	
876PH	100 ohm platinum RTD, 2 or 3 wires 1000 ohm platinum RTD, 2 or 3 wires 3000 ohm Balco RTD, 2 wires
876EC	100 ohm or 1000 ohm platinum RTD, 100 kohm thermistor
876CR	100 ohm or 1000 ohm platinum RTD 10 kohm or 100 kohm thermistor
Temperature Compensation	
876EC	Absolute, NaCl, H2SO4, NaOH, linear, custom and several other standard types
876CR	Absolute, NaCl, ultrapure water, linear, custom and several other standard types
Sensor Compatibility	
876EC	871EC, 871FT, EP307 and FT10 Series
876CR	871CC and 871CR Series
Output Hold	
	Hold OFF, Hold at PRESENT value, or Hold at Manual value
Auto Buffer Recognition	
876PH	Six (6) tables of preprogrammed buffer valves
History Log	
	100 most recent events stored in nonvolatile memory
Environmental and Corrosion Resistance	
	IP66 and NEMA 4X
Electrical Safety Specifications	
	See Model code

How to Order—876PH, 876EC or 876CR

876PH Ordering Instructions

1. Model Number
2. Measurement Range
3. Measurement Electrode Type; Specify Glass pH, Antimony pH, ORP or ISE
4. Temperature Compensation Input; Platinum or Balco RTD Type, Resistance, and 2- or 3-wires
5. User Tag and Application

876EC Ordering Instructions

1. Model Number
2. Measuring Sensor Type: 871EC-SP, -PP, -PT, -RE, -LB, -HP, BW, -UT, -NL, -TF, or –EV; or full Model Code of 871FT Flow-through Sensor; or full Model Code of FT10 Sensor.
3. Measurement Display Format (example 9.999 mS/cm).
4. Temperature Compensation Type.
5. Analog Output Range.
6. Temperature Compensation Input:
   - 871EC-SP, -PT, -RE, -LB, -TF, -EV use 100 KΩ thermistor
   - 871EC-HP, -BW, -UT, PP use 100ΩRTD, 2-wire
   - 871EC-FT or FT10 RTD Code "R" use 1000ΩRTD, 3-wire
   - 871EC-FT, RTD Code "T" use 100ΩRTD, 2-wire
   - FT10 Code "T" use 100ΩRTD, 3-wire
7. User Tag and Application

876CR Ordering Instructions

1. Model Number
2. Sensor Cell Factor (0.1, 1.0, or 10 c m-1).
3. Measurement Display Format (example 9.999 uS/cm).
4. Temperature Compensation Type.
5. Analog Output Range.
6. Temperature Compensation Input:
   - 2-wire platinum RTD; 100Ω
   - 2-wire platinum RTD; 1000Ω
   - 3-wire platinum RTD; 100Ω
   - 3-wire platinum RTD; 1000Ω
   - 10 kΩ thermistor
   - 100 kΩ thermistor
7. User Tag and Application

How to Order—876PH, 876EC or 876CR

Model					
Intelligent Transmitter for pH, ORP and ISE Measurement	876PH				
Intelligent Transmitter for Electrodeless Conductivity Measurement	876EC				
Intelligent Transmitter for Contacting Conductivity and Resistivity Measurement	876CR				
Output Signal					
Intelligent; Digital HART and 4 to 20 mA		-T			
Enclosure Mounting					
Panel Mounting			W		
Surface Mounting			X		
Pipe Mounting (Horizontal or Vertical Pipe)			Y		
Electrical Safety (contact Foxboro for the current status of certifications)					
ATEX intrinsically safe; II 1 G, Ex ia IIC, Zone 0				AA	
ATEX energy limited for II 3 G, Ex nL IIC, Zone 2; and intrinsically safe for II 3 G, Ex ic IIC, Zone 2				AN	
CSA intrinsically safe; Class I, II, III Division 1; and Ex ia IIC, Zone 0				CA	
CSA for Class I, II, III, Division 2; and energy limited for Ex nL IIC, Zone 2				CN	
FM intrinsically safe; Class I, II, III, Division 1; and AEx ia IIC, Zone 0				FA	
FM nonincendive for Class I, II, III, Division 2; and energy limited for AEx nL IIC, Zone 2				FN	
IECEx intrinsically safe; II 1 G, Ex ia IIC, Zone 0				DA	
IECEx energy limited II 3 G, Ex nL IIC, Zone 2; and intrinsically safe II 3 G, Ex ic IIC, Zone 2				DN	
No Certification				ZZ	
Optional Selections					
Special per Engineering Order[a]					-1
Storm Door[b]					-7
Detailed Instruction Manual[c]					-M

Notes

a Provides ability to preconfigure the instrument with custom temperature compensation.
b Used to protect front panel controls, particularly in field mounting applications.
c A CD-ROM is shipped as standard with each transmitter.

871CC Series Contacting Conductivity/Resistivity Sensors

- Measures Very Low Conductivity or Resistivity
  - ✔ *ideal for applications involving pure and ultrapure water*
- Versatile Mounting
  - ✔ *for submersion, insertion, and flow-through applications*

The 871CC Series Contacting Conductivity/Resistivity Sensors, when coupled with 873CC, 873RS or 875CR Series Analyzers, or 876CR Intelligent Transmitter or 870CC Series Transmitters, measure conductivity or resistivity of process solutions.For complete specifications, refer to Product Specification Sheet PSS 6-3C2 A.

Specifications:

Wetted Parts Materials: See Table 1

Temperature and Pressure Limits: See Table 2

Conductivity Ranges: For both 0.1 cm^{-1} and 10 cm^{-1}cell-factor sensor see Table 2

Resistivity Ranges: For 0.1 cm^{-1} cell-factor sensor only see Table 2

T*emperature Compensator (Integral):* See Table 2

Cable: Sensor Models 871CC-A to 871CC-G have integral PVC-insulated cable rated to 105°C (220°F); Sensor Models 871CC-K to 871CC-M have integral Tefzel-insulated cable rated to 150°C (300°F).Cables are 6 m (20 ft) long, screened (shielded), terminated in numbered spade lugs, or lugless. Type of cable used and method of attaching the cable to the sensor are matched to the application and mounting of sensor.

Mounting: See "Sensor Application" table for mounting specifications

Table 1 *Process Wetted Parts*

Sensors with ¾ NPT Bushing or Twist-Lock Process Connection

Cell Factor	Sensor Body Code	Seals/ 0-Rings	Insulator	Removable Sheath	Bushing	Electrodes
0.1 cm^{-1}	-A	EPDM	Ryton[1]	None	Teflon-S	Titanium or
	-F	EPDM	Ryton	None	Coated 300	Monel, as
	-K	EPDM	pctfe[1]	None	Grade ss	Specified by
	-E	EPDM	Ryton	None	None (twist lock)	Model Code
10 cm^{-1}	-A	EPDM	Noryl	ptfe[1]	Teflon-S	High Density
	-F	EPDM	Noryl	ptfe	Coated 300	Graphite
	-K	EPDM	pctfe	ptfe	Grade ss	Encapsulated in
	-E	EPDM	Noryl	ptfe	None (twist lock)	Gold-Plated Cups

Universal-Mount, Insertion, and Dip Sensors

Cell Factor	Sensor Body Code	Seals/ 0-Rings	Insulator	Removable Sheath	Upper Housing	Electrodes
0.1 cm^{-1}	-B	EPDM	Ryton	None	316 ss	Titanium or
	-G	EPDM	Ryton	None	Ultem 1000	Monel, as
	-D	EPDM	Ryton	None	316 ss	Specified by
	-M	EPDM	pctfe	None	(includes insertion shaft)	Model Code
10 cm^{-1}	-B	EPDM	Noryl	ptfe	Teflon-S	High Density
	-G	EPDM	Noryl	ptfe		Graphite
	-D	EPDM	Noryl	ptfe	Grade ss	Encapsulated in
	-M	EPDM	pctfe	ptfe	316 ss (includes insertion shaft)	Gold-Plated Cups

Table 1 *(continued)*
Sensors with Sanitary Fittings

Cell Factor	Sensor Body Code	Seals/ 0-Rings	Insulator	Removable Sheath	Tri-Clamp*	Electrodes
0.1 cm^{-1}	-C	EPDM	Ryton	None	316 ss	Titanium or Monel, as
	-L	EPDM	pctfe	None	316 ss	Specified by Model Code
10 cm^{-1}	-C	EPDM	Ryton	ptfe	316 ss	High Density Graphite
	-L	EPDM	pctfe	ptfe	316 ss	Encapsulated in Gold-Plated Cups

* Finish – 12 microinch.

Table 2 Pressure & Temperature Limits, Conductivity & Resistivity Ranges, Temperature Compensator

Sensor Body Code	Temperature Limits[2]	Pressure Limits	Applicable Conductivity & Resistivity Ranges Cell Factor 0.1 cm-1[3]	Cell Factor 10 cm-1	Temperature Compensator (integral)
-A to -G	0° and 120°C (32° and 250°F)	-0.1 and +1.4 MPa (-15 and +200 psi)	From 0 to 1 up through0 to 200 µS/cm Conductivity Range—From 0 to 2 up through 0 to 20 Mohm-cm Resitivity Range[4]	Beyond 0 to 200 up through 0 to 20,000 µS/cm Conductivity Range	100 kohm Thermistor for use with: 873RS, 873ARS, 873CC, 873ACC, 875CR Series Analyzers; 870CC and 876CR Series Transmitters; 872-30, 874CC, 874RS Series Monitors
-K to -M[5]	120°C at 3.4 MPA (250°F at 500psi) 150°C at 2.5 MPA (300°F at 375psi) 175°C at 1.7 MPA (350°F at 250psi)				100 ohm Platinum RTD for use with: 873RS, 873ARS, 873CC, 873ACC, 875CR Series Analyzers; 876CR Series Transmitter

Notes

1 Ryton is polyphenylene sulfide; ptfe is polytetrafluoroethylene; pctfe is polychlorotrifluoroethylene
2 All 0.1 cm-1 cell-factor sensors with Body Code A through M are labeled with the exact cell factor and temperature cell factor (except code'G'). All 0.1 cm-1 cell-factor sensors are constructed and tested for an accuracy of better than ±2%
3 Specifications are for 0.1 cm-1 cell-factor sensors only. Maximum temperature for 10cm-1 cell-factor sensor is 150°C at 2.5 MPa (300°F at 375 psi)
4 Specify Option Code -9
5 If -K, -L, or -M sensors is to be used with 870CC Series Transmitters, or with 874CC or 874RS Series Monitors, no automatic temperature compensation can be applied. RTDs are not supported on these instruments. RTD is compatible with 873RS, 873CC, 875CR, 876CR or 872-30 Series Analyzers.

How to Order—Specify model number 871CC followed by order code for each selection

Mounting Design

Threaded bushing/ ¾ NPT	A
Universal	B
Sanitary	C
Insertion	D
Twist Lock	E
Threaded bushing/ ¾ NPT with ½ NPT conduit connector	F
Dip sensor	G
Threaded bushing/ ¾ NPT, high temperature[8]	K
Sanitary, high temperature[8]	L
Insertion/ high temperature[8]	M

Cell Factor and Electrode Material

0.1 cm-1 titanium	2
10 cm-1 graphite	4
0.1 cm-1 Monel. For Mounting Design codes A, G, or K only	6

Optional Features

Nonstandard cable length[9]	3
No spade lug terminals attached to end of cable.[10]	4
Nonstandard length integral cable terminated in connector. For Mounting Design code A or G only[9,11,12]	5
Integral connector on sensor. For Mounting Design code A and G only[11]	6
Standard length integral cable terminated in connector. 6 m (20 ft). For Mounting Design code A or G only[11,12]	7
Cell factor determined in Foxboro pure water loop	9

Specify cable length, if nonstandard

Specify information for instrument tag

Specify mounting option accesories.

Notes

8 The K, L, and M sensors contain an integral 100 ohm platinum RTD for automatic temperature compensation. This RTD is compatible with 873RS, 873CC or 875CR Series Analyzers or 876CR, 872-30 Series Monitors only. If these sensors are to be used with 874RS or 874CC Series Monitors or 870CC Series Transmitters, no automatic temperature compensation can be applied.

9 Maximum length: 150 m (500 ft) for 873RS, 873CC, 872-30, 874RS, and 874CC Series; 30 m (100 ft) for 870CC Series and 875CR, 876CR.

10 Required when 871CC Series Sensor is used with 873RS or 873CC Series Analyzer or 874RS or 874CC Series Monitor.

11 Not recommended for resistivity measurements.

12 Requires patch cord.

871CR Series Contacting Conductivity/Resistivity Sensor

Sensor Mounting and Description

A, B, C
0.1/cm Universal Bore piece sensor with ¾ NPT bushing. Use directly in Tee or Flow Chamber installations.

D, E
10/cm Universal Bore piece sensor with ¾ NPT bushing. Use directly in Tee or Flow Chamber installations.

A, B, C, D, E, J
Extended length Universal Bore piece sensor with ¾ NPT bushing. Use when installing in larger Tee (with reducer), or at elbow to ensure adequate flow through sensor (0.1/cm CF shown).

F
0.1, or 10/cm Universal Bore piece sensors with 1½ in Triclamp fitting (2 in triclamp is available by purchasing Universal bore piece and 2 in Triclamp accessory separately). 0.1/cm CF fitting has mirror finish.

H
Insertion sensor that is used with SS Ball valve assembly. Available in standard and 4 inch insertion lengths. (10/cm cell factor shown).

J
Universal bore piece. Is designed to utilize Foxboro flanges, Triclamp fittings, ¾ NPT, 1 NPT, metric bushing.

K
Universal bore piece with 3/8 NPT conduit connector. Is designed to utilize Foxboro flanges, Triclamp fittings, or ¾ NPT, 1, NPT, metric bushing.

The 871CR Series contacting conductivity and resistivity sensor is suitable for ionic measurements in most cleanwater applications found in power, semiconductor, pharmaceutical and other process industries. Application flexibility is enhanced by the choice of insulator materials and mounting hardware. Installations are simplified with the sliding bore piece design. The design also permits mounting hardware interchangeability and lower sensor replacement costs.

Specifications

Pressure/Temperature Limitations: (Consult PSS 6-3C2B for precise specifications)

General Purpose Applications: Ambient temperatures and lower pressures generally can be satisfied with CPVC or Virgin PVDF insulators and bushings for 0.1/cm CF applications or Glass filled NORYL insulators and bushings for 10/cm CF applications. "Standard" PVC jacketed cable (rated to 80°C) can be specified for these applications.

High Temperature and Pressure Applications: 0.1/cm CF sensors require Virgin PEEK insulators, either Titanium or Virgin PEEK bushings (or other mounting hardware specified separately); 10/cm CF applications require PEEK insulators and PEEK or SS mounting. High temperature applications above 80°C (176°F) require High Temperature (teflon jacketed) cable.

Cell Factor Measurement Range: A choice of two cell factors, 0.1 and 10/cm is available with the 871CR sensor model code. See table below for measurement ranges available.

Measurement Ranges & Cell Factor:

Cell Factor	Unit	Ranges (Temp.Corrected[1]) 876CR Transmitter	875CR Analyzer
0.1 cm^{-1}	Mohm-cm	0.0004 to 100.0	0.1-20
	uS/cm	0.01 to 2500	1-200
10.0cm^{-1}	kohm-cm	0.0040 to 999.9	0.5-200
	uS/cm	100 to 9999	100-5000
	mS/cm	0.001 to 250	0.1-20

Process Wetted Parts:

	0.1/cm	10/cm
Insulator	CPVC Virgin PVDF Virgin PEEK	Glass Filled Noryl Glass Filled PEEK
Electrode Material	Titanium Monel	Graphite
O-Ring	Teflon Coated EPDM	Teflon Coated EPDM
Bushings	CPVC Virgin PVDF Virgin PEEK Titanium	Glass Filled PEEK Glass Filled Noryl Stainless Steel
Triclamp	Titanium Stainless Steel	Stainless Steel
Gate valve Shaft	Virgin PVDF Stainless Steel	Stainless Steel
Other: (Outer Sheath)	–––	Titanium

6

How to Order—Specify model number 871CR followed by order code for each selection

Cell Factor
- 0.1/cm Conductivity Sensor with Class B 1000 ohm RTD . . . -A
- 0.1/cm Resitivity Sensor with Class A 1000 ohm RTD[2] . . . -B
- 10/cm Conductivity Sensor with Class B 1000 ohm RTD . . . -C

Insulator Material
- CPVC[3] . . . 1
- Virgin PVDF[4] . . . 2
- Virgin PEEK[4] . . . 3
- Glass Filled PEEK[5] . . . 4
- Glass Filled NORYL[5] . . . 5

Electrode Material
- Graphite[5] . . . G
- Monel[4] . . . M
- Titanium[4] . . . T

Insertion Length
- Standard . . . 1
- 4 inch . . . 4
- 6 inch . . . 6

Sensor Mounting
- Universal Bore Piece with ¾ NPT CPVC bushing[3, 6] . . . A
- Universal Bore Piece with ¾ NPT Virgin PVDF bushing[4, 7] . . . B
- Universal Bore Piece with ¾ NPT Virgin PEEK bushing[4, 8] . . . C
- Universal Bore Piece with ¾ NPT Glass Filled PEEK bushing[5, 9] . . . D
- Universal Bore Piece with ¾ NPT Glass Filled NORYL bushing[5, 10] . . . E
- Universal Bore Piece with 1½ in Tri-Clamp Fitting[11, 22] . . . F
- Insertion Sensor for use with 1 in S.S. Ball Valve Assembly[4, 12, 13] . . . H
- Universal Bore Piece[14] . . . J
- Universal Bore Piece with Integral Conduit Fitting[14, 15] . . . K

Temperature Compensation

1000 ohm RTD	1			

Cable Selection[23]

Standard Length (20 ft), standard temperature cable		A		
Standard Length (20 ft), high temperature cable		B		
30 ft standard temp cable		C		
30 ft high temp cable		D		
40 ft standard temp cable		E		
40 ft high temp cable		F		
60 ft standard temp cable Assembly		G		
60 ft high temp cable		H		
80 ft standard temp cable		J		
80 ft high temp cable		K		
No Cable (Integral Connector on Sensor)[16, 17, 18, 19]		L		

Termination

Cable with #6 Spade Lugs			1	
Cable with Connector at end[16, 19, 20]			2	
Integral Connector on Sensor[16, 17, 19, 21]			3	

Options

Cell Factor/Cert NIST Traceable (Use for USP23/24 compliance)[4]				-S
Cell Factor/CERT determined in Foxboro Pure Water Loop [26,27,28]				-R

Specify Mounting hardware[25]

Specify Electrical Certification

Specify Accessories

Specify Tag

Notes

1 Absolute ranges (without temperature compensation) exceed these ranges by roughly 5Xs
2 Recommended for optimum Resistivity Measurements
3 -A Cell Factor only
4 -A & -B Cell Factor only
5 -C Cell Factor only
6 Insulator Material "1" only
7 Insulator Material "2" only
8 Insulator Material "3" only
9 Insulator Material "4" only
10 Insulator Material "5" only
11 Insertion Lengths 4 and 6 only
12 Insertion Lengths 1 and 4 only
13 Electrode Material "G" or "T" only
14 No mounting accessories included
15 Not available with Cable "L"
16 Not recommended for optimum Resistivity Measurements
17 Not available with Sensor Mountings "H" or "K"
18 Termination "3" only
19 Patch Cable required. Specify Separately.
20 Not available with "high temp" Cable Selections
21 Cable Selection "L"
22 -A & -B Cell factor utilize Titanium Tri-clamp fitting; -C Cell factor uses 316 S.S. Tri-Clamp Fitting
23 Custom cable Lengths available. Contact Foxboro.
24 Ball valve assembly required for new installations. Specify Separately
25 Check PSS 6-3C2 B for accessories and Electrical Certificates
26 Available for insulator material "2", virgin PVDF only
27 Contact Foxboro
28 -B cell factor only

871DO Series Dissolved Oxygen Sensors

The 871DO Sensor, when used in conjunction with DO Accessories, and the 873DO Electrochemical Analyzer, provides a reliable and accurate measurement of dissolved oxygen in aeration basins, aqueous streams, ponds, and industrial processes.
For complete specifications, refer to Product Specification Sheet PSS 6-9B1 A.

- Advanced Diagnostics
  - *membrane fouling detection*
  - *membrane breakage detection*
  - *electrolyte bubble detection*
- Easy Installation and Maintenance
  - *one piece field replaceable membrane cap*
  - *optional automatic mechanical membrane cleaner*
  - *multiple mounting accessories, including ballfloat (see figure)*
  - *swivel hand rail mounting kit part number EP409B (see figure)*
- Durable Sensor Design
  - *process resistant PVDF and Noryl construction*
  - *stainless steel reinforced composite membrane*

Specifications

Sensor Type: Polarographic Clark Cell with composite membrane enclosing four electrodes in KCl electrolyte
Measuring Electrode: Gold
Isolated Reference Electrode: Silver/Silver Chloride (Ag/AgCl)
Auxiliary (Counter) Electrode: Silver
Test Electrode: Gold

Membrane: Composite Stainless Steel reinforced membrane on replaceable cap

Process Wetted Parts Materials:
Body: PVDF (Upper Housing), Noryl (Lower Housing)
Membrane: Silicone Rubber
Membrane Cap Holder: Noryl
O Ring: Silicone Rubber, Viton,and EPR
Vent Cap: Acetal
Vent Seal Gasket:Silicone Rubber
Automatic Temperature Compensation: Achieved using 100 k ohm thermistor within sensor to provide compensation between 0 and 50°C (32 and 122°F)

Process Pressure-Temperature Limits: 0 and 210 kPa gauge (0 and 30 psig) 0 and 50°C (32 and 122°F)

Sensor Mounting: 1-in external MNPT on both ends, with a 1.125-in wrench flat on body. For in-situ or in-line mounting, as required.

Cable Length:
Integral Cable, Standard: 9 m (30 ft)
Integral Cable Maximum: 150 m (500 ft)

Integral Cable Terminations:
Standard Terminations: Seven connections #22 AWG, stripped and tinned.
Optional Terminations: Male connector to mate with patch cable from 873DO Analyzer.

Approximate Mass: 0.34 kg (0.75 lb)

- Swivel Bracket
- Hand Rail Mounting
- For pH and DO Sensors

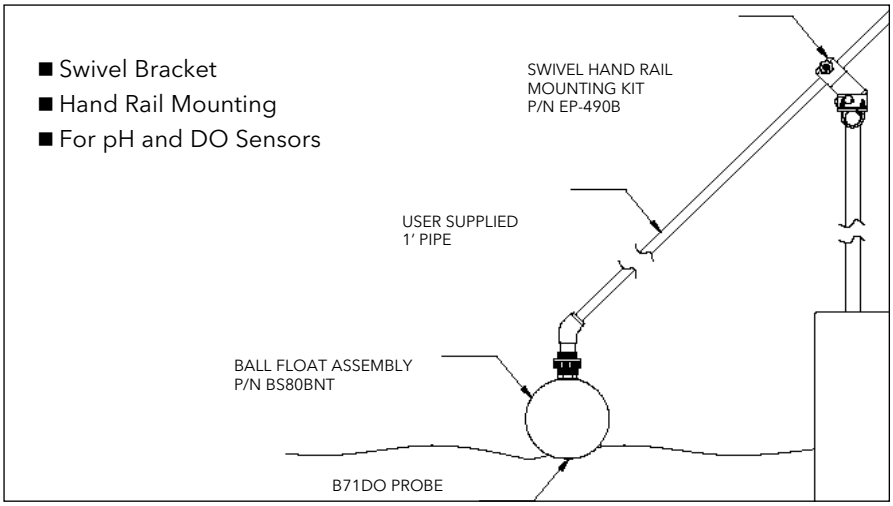

How to Order—Specify model number 871DO followed by order code for each selection

Membrane

Composite membrane	C

Optional Features

Nonstandard length integral cable, terminated in stripped and tinned leads, 150 m (500 ft) maximum. Specify length	3
Nonstandard length integral cable, terminated in male connector, 150 m (500 ft) maximum. Specify length[1]	5
Standard length 9 m (30 ft) integral cable, terminated in male connector[1]	7

Specify cable length, if nonstandard

Specify mounting hardware, junction box, and extension cable, if required (Refer to PSS 6-9B1 A for details)

Specify information for instrument tag

This product and its components are protected by U.S. patent 5,326,447. Corresponding patents have been issued or are pending in other countries.

Notes

1 Requires patch cord. Specify either P/N BS806JY (10 ft) or P/N BS806JT (special length per sales order).

871A Series pH and ORP Sensors

- Dependable, Low Maintenance Design
  - *PVDF material*
  - *flat, ruggedized glass pH electrode*
  - *double junction reference electrode*
  - *small size*
  - *no metallic wetted parts*
  - *sealed electrodes*
- Flexible Mounting
  - *1-inch external NPT connections*
  - *easy installation and removal*
  - *for in line or in situ mounting*
  - *full line of accessories*
  - *2" Tri-clamp flange EP389B*

The 871A Series pH and ORP Sensors are suitable for most pH and ORP measurement applications. Units are for use with 873PH and 875PH Series Analyzers or 876PH Series Transmitters.

Functional Specifications

Pressure/Temperature Rating:

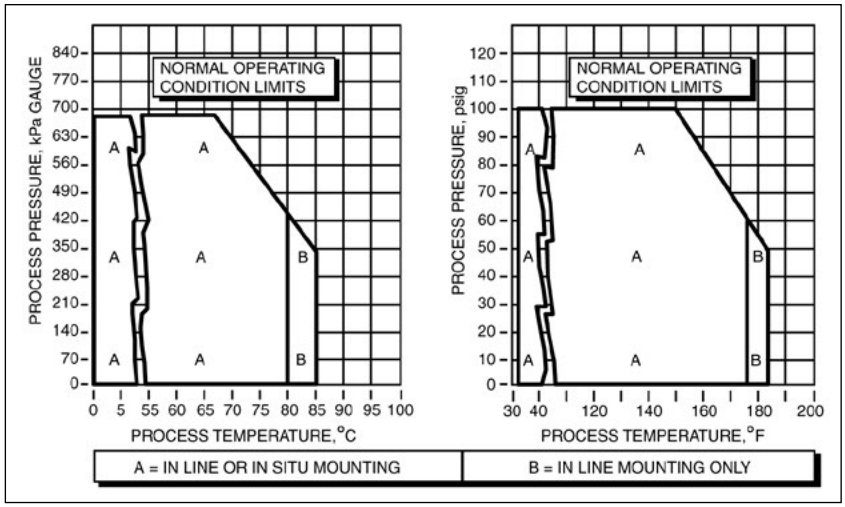

Physical Specifications

Process Wetted Parts Material:
Body: PVDF
Measuring Electrode:
pH: Flat glass
ORP: Platinum or gold, as specified
Reference Electrode: Ceramic junction
O-Ring: EPR (Ethylene Propylene Rubber)

Sensor Mounting: 1-inch external NPT on both ends. For in line or submersible mounting, as required

Wire Terminations: (see note 10, next page)
For Standard Configuration Sensors: Stripped & Tinned
For Intelligent Configuration Sensors: No. 6 Spade Terminals
Optional No.6 Spade Terminals available for Standard Configuration Sensors

Measurement Range:
pH: 2 to 12 pH
ORP: ±2000 mV
Automatic Temperature Compensation:
For Standard Configuration Sensor: 2 wire platinum RTD,100 ohm.
For Intelligent Configuration Sensors:
871A-3 Version: 2 wire platinum RTD, 1000 ohm
871A-4 Version: 3 wire platinum RTD, 1000 ohm

Analyzer/Transmitter Compatibility:
873PH: 871A-1, 871A-2
873APH: 871A-1, 871A-2
870ITPH: 871A-1, 871A-3, 871A-4
Note: 871A-2 is compatible but some diagnostics are not available.
875PH: 871A-1, 871A-3, 871A-4
Note: 871A-2 is compatible but some diagnostics are not available.

How to Order—Specify model number 871A followed by order code for each selection

Signal Conditioning

Standard Configuration, No Preamp	1
Standard Configuration, Integral Preamp[1]	2
Intelligent Configuration, No Preamp[2]	3
Intelligent Configuration, Integral Preamp[2]	4

Measuring Electrode and Material

pH, flat glass	F
ORP, platinum	D
ORP, gold	E

Optional Features

Leads terminated with No. 6 spade terminals for Standard Configuration Sensors only[3, 4, 5, 10]	1
Nonstandard integral cable length[4, 6]	3
Nonstandard length integral cable, terminated in male connector Specify length[7, 8, 9]	5
Standard length 3 m (10 ft) integral cable, terminated in male connector[7, 8, 9]	7

Specify cable length if nonstandard

Specify mounting hardware, junction box, and extension cable, if required. (Refer to PSS 6-1C2 B for details.)

Specify information for instrument tag

Notes

1 Compatible with 876PH Transmitter and 875PH, but some diagnostics are not available.
2 Compatible with 876PH Transmitter and 875PH.
3 All cables that do not have connectors , have leads terminated with straight pin lugs and are now compatible with all Foxboro transmitters. Option code -3 does not provide spade lugs. Option -1 is included for customers who automatically order it.
4 Except for the possible combination "-13", only one optional selection may be chosen. Optional Selections "1" and "-3" may each be selected individually or as a combination.
5 Not available with Intelligent Configuration Sensors. Their standard termination is #6 spade terminals.
6 Maximum integral cable length is 15 m (50 ft).
7 For use with 871-2 only.
8 Not compatible with ball valve assembly mountings.
9 Requires patch cable ordered separately.
10 New cables and cable terminations are being phased in. New lead termination will be crimped, straight-pin lugs, suitable for use with all analyzers and transmitters. Pin-lug terminations will replace both #6 spade lugs and stripped and tinned leads.

871PH Series pH, ORP (including DolpHin technology)

The 871PH Series pH and ORP Sensors, when coupled with 873PH and 875PH Series Analyzers or 876PH Series Transmitters, provide pH or ORP measurements of process solutions.
For complete specifications, refer to Product Specification Sheet PSS 6-1C2 A.

- Rebuildable Sensor Design
  - *replaceable plug-in electrodes provide extended sensor life*
  - *low-cost electrode and reference junction kits help control replacement costs*
  - *one probe fits all applications*
  - *changeable mounting minimizes spare parts*
- Versatile Mounting
  - *twist lock*
  - *easy installation and removal*
  - *for submersion, insertion, and flowthrough applications*
- Choice of Electrodes
  - *pH: spherical, flat, or domed glass, antimony*
  - *ORP: gold, platinum*

New Feature Highlights
Many new measuring electrodes, reference junctions, options, and accessories have been added to the 871PH sensor family. These include:

- High temperature electrode featuring unique DolpHin™ Series high temperature glass
- Patented double junction reference with integral Nafion ion barrier
- Variopin Quick cable connector
- Optional selections for high temperature cable and O-Ring material
- A ptfe collar, which improves self cleaning, and also minimizes coating buildup.

Physical Specifications:
Materials: Ryton or CPVC housing; Viton O-rings. See How to Order table for electrodes and metallic wetted parts.
Mounting: Refer to Product Specification Sheet PSS 6-1C2 A for mounting options

Functional Specifications
Pressure/Temperature Ratings:

Ryton Body

Measuring Electrode Type	Ball Valve or Submersible Installation		In-Line Installation	
	Maximum Pressure	Temperature Range	Maximum Pressure	Temperature Range
Spherical Glass pH	0.7 MPa (100 psi)	-5 to + 80°C (20 to 175°F)	0.7 MPa (100 psi)	-5 to + 100°C (20 to 212°F)
Flat Glass pH	1 MPa (150 psi)	-5 to + 80°C (20 to 175°F)	1 MPa (150 psi)	-5 to + 85°C (20 to 185°F)
Domed DolpHin Glass pH	0.7 MPa (100 psi)	0 to + 80°C (32 to 175°F)	0.7 MPa (100 psi)	0 to + 121°C (32 to 250°F)
Antimony pH	1 MPa (150 psi)	-5 to + 80°C (20 to 175°F)	1 MPa (150 psi)	-5 to + 125°C (20 to 255°F)
ORP	1 MPa (150 psi)	-5 to + 80°C (20 to 175°F)	1 MPa (150 psi)	-5 to + 125°C (20 to 255°F)

CPVC Body

Measuring Electrode Type	Ball Valve or Submersible Installation			In-Line Installation		
	Maximum Pressure at Operating Temperature			Maximum Pressure at Operating Temperature		
Spherical Glass pH(a)	0.9 MPa (125 psi) at -5°C (20°F)	0.6 MPa (90 psi) at 50°C (120°F)	0.3 MPa (50 psi) at 80°C (175°F)	0.9 MPa (125 psi) at -5°C (20°F)	0.3 MPa (50 psi) at 80°C (175°F)	0.1 MPa (15 psi) at 100°C (212°F)
Flat Glass pH						
Domed DolpHin Glass pH						
Antimony pH						
ORP						

(a) Maximum Pressure at -5°C (20°F) for Spherical Glass pH electrode is 0.7 MPa (100 psi).

Temperature Compensation: Sensor includes encapsulated automatic temperature compensator which covers range -5 to + 125°C (20 to 255°F).
Analyzer/Transmitter Compatibility:
873PH: 871PH-1, -2
876PH: 871PH-3, -4, -5, -6
Note: 871PH-1,2 are compatible but some diagnostics are not available.
875PH:871PH-3, -4, -5, -6
Note: 871PH-1,2 are compatible but some diagnostics are not available.
Measuring Electrodes: Plug-in interchangeable electrodes; glass pH electrodes employ high stability silver, silver chloride (Ag, AgCl) internals. Ryton, ptfe, or ctfe as specified and now available with DolpHin High Temperature Glass.
Reference Electrode: Non flowing,with Ag,AgCl internals and potassium chloride (KCl) saturated with AgCl electrolyte. Process junction is ceramic and now available with patented double junction with Nafion ion barrier.

How to Order—Specify model number 871PH followed by order code for each selection.

Sensor Body Material and Diagnostic Configuration					
Ryton, Standard Configuration, Integral Preamp[1]	-1				
CPVC, Standard Configuration, Integral Preamp[1]	-2				
Ryton, Intelligent Configuration, Integral Preamp[2]	-3				
CPVC, Intelligent Configuration, Integral Preamp[2]	-4				
Ryton, Intelligent Configuration, No Preamp[2]	-5				
CPVC, Intelligent Configuration, No Preamp[2]	-6				
Measuring Electrode and Body Material					
Spherical Glass pH, Ryton		A			
Antimony pH, Ryton		B			
Platinum ORP, Ryton		D			
Gold ORP, Ryton		E			
Flat Ruggedized Glass pH, Ryton[3]		F			
DolpHin™ High Temperature Glass pH, Ryton		G			
Spherical Glass pH, ptfe		P			
Antimony pH, ctfe		Q			
Platinum ORP, ctfe		R			
Gold ORP, ctfe		S			
Flat Ruggedized Glass pH, ptfe[3]		T			
DolpHin™ High Temperature Glass pH, ptfe		U			
None		X			
Sensor Wetted Metallic Parts Material					
Titanium			1		
Carpenter 20 Cb			2		
AISI Type 316L stainless steel			3		
Monel			5		
Tantalum			6		
Reference Junction and Body Material					
Ceramic, Ryton				A	
Ceramic, ptfe				B	
Ceramic, Double Junction, Ion Barrier, pvdf				D	
Optional Features[4]					
Nonstandard Cable Length (not available with Option -Q)[4]					-3
Nonstandard length integral cable, terminated in male connector. Specify length. (not available with Option -4, -B, -Q, -H)[4, 5, 6, 7]					-5
Standard length 6 m (20 ft) integral cable, terminated in male connector. (not available with Option -4, -B, -Q, -H)[5, 6, 7]					-7
Integral High Temperature Cable (With Sensor Body -5, -6; not avail. with Options -5, -7, -Q)					-H
Integral Cable Terminated with Variopin Quick Connector (not avail. with Options -4, -5, -7)[7, 10]					-B
Variopin Quick Connector Integral to Sensor (not avail. with Options -3, -4, -5, -7)[7, 10]					-Q
EPDM O-Rings (standard o-rings are Viton)					-E
Chemraz O-Rings (standard o-rings are Viton)					-C
No spade lug terminals attached to end of cable (not avail. with Options -5, -7, -B, -Q)[8]					-4
Teflon Collar, ptfe					-T

Specify cable length, if nonstandard.
Specify information for instrument tag
Specify sensor mounting option
Specify replacement electrodes, if desired

Notes

1 Does not support the sensor diagnostic features of 876PH Transmitter and 875PH Analyzer.
2 Compatible with 876PH Transmitter and 875PH Analyzer only.
3 Optimum accuracy is in the range of 2 to 12 pH. It can be used with pH instruments that are ranged from 0 to 14 pH.
4 Standard cable length if not specified = 6 m (20 ft).
Maximum integral cable length = 33 m (100 ft) for 870PH pH/ORP transmitters.
150m (500 ft) for 876PH Transmitters and the 873PH, 873APH, and 873DPX Electrochemical Analyzers and 875PH Analyzers.
5 Requires Patch Cable from 6-1Z1.
6 Not compatible with ball valve assembly mountings.
7 Compatible with 871PH-1 and 871PH-2 only, this option is NOT a Variopin style connector.
8 All cables that do not have connectors, have leads terminated with straight pin lugs, and are now compatible with all Foxboro Analyzers and Transmitters. Option -4 is no longer required for compatibility with 873 Series. Option -4 is included for customers who automatically order it.
10 When used with 871PH-3, 4, the standard 3-Wire 1000 Ω RTD is supplied as 2-Wire, 1000 Ω RTD.

DolpHin™ Series pH Sensors

The DolpHin™ Series pH sensor provides highly accurate and stable pH measurements in process applications. Sensors address process applications from routine to the most severe pressure, temperature, and chemical conditions. A comprehensive suite of mounting and wiring accessories make the DolpHin™ Series the easiest to install, calibrate, and service. The sensors are compatible with older analyzers and are fully compatible with the Intelligent Models 875PH and 876PH Transmitters. DolpHin™ Series delivers breakthrough performance in a rugged easy-to-use design.

Ordering Information – Specify

- Model Number from Page 4
- User Tag Information
- Order Separate Items, as needed (see Price Book Sections, as noted)
  - ✓ *pH Analyzer/Transmitter (see section 6-1)*
  - ✓ *Accessories and mounting hardware (see section 6-1ZI, page 5 and 6)*
  - ✓ Calibration Buffers (see section 6-11A1, page 3)
- Certifications as needed

Performance (at Reference Conditions)

Accuracy: ± 0.02 pH Domed High Temp Glass Electrode
Repeatability: ± 0.02 pH Domed High Temp Glass Electrode
Stability: ± 0.02 pH/24 Hours Domed High Temp Glass Electrode

Model Description

Model PH10 DolpHin Series are a family of high performance pH sensors with extensive features and accessories. Breakthrough performance in stability, accuracy, and long life makes DolpHin the premier pH sensor for on-line process application.

Laboratory testing and extensive field trials have proven DolpHin's superior performance. It outlasts other sensors in high temperature and temperature cycling applications up to 121°C (250°F). It remains fast and accurate, while conventional pH sensors lose sensitivity and are slow to respond to pH changes. Foxboro engineers have formulated a unique pH glass formulation which makes DolpHin exceptionally stable, accurate, and long lasting, even in the harshest process applications. Every component of the DolpHin sensor has been designed to maximize ease-of-use, long life, and accuracy, including: the precision reference junction, high temperature electrolyte, reference electrode with Nafion ion barrier, ultra fast automatic temperature compensation, and a single rugged body that fits the widest variety of mounting accessories. The elegance of the DolpHin design delivers a single, easy-to-use sensor with unmatched pH measurement performance.

Standard Specifications

Measuring Electrode:
Domed High Temperature Glass pH with and without protective guard
Flat Glass pH
Antimony pH

Reference Electrode:
Precision double junction with ceramic external process wetted junction and ion-barrier internal junction high temperature Gel Electrolyte. Ag/AgCl half cell.

Measurement Range:
Domed High Temperature Glass pH electrode: 0 - 14 pH
Flat Glass pH electrode: 2,& 12 pH
Antimony pH electrode: 1 - 11 pH

Preamplifier:
Available with Model Code Selection -P
Integral, encapsulated, differential high impedance

Automatic Temperature Compensation:
For use with Model 873PH and older Analyzers 2-wire platinum RTD, 100 ohm
For use with 876PH and 875PH Analyzers 3-wire platinum RTD, 1000 ohm
For use with non-Foxboro Analyzers that require 2-wire. 3K Balco RTD. 3000 ohm
Enhanced response: Both I00 ohm and 1000 ohm Pt RTD selections are available in an enhanced speed of response configuration, response, for applications requiring fast temperature response.

Wetted Parts:
Body: PVDF (Kynar)
Measuring Electrode: Glass or Antimony as specified in Model Code
Reference Junction: Ceramic
O-Rings: Viton is standard; Chemraz or EPDM are optional selections
Solution Ground: Conductive PVDF

Sensor Mounting:
¾ inch NPT on both ends of sensor for direct process connection or submersion.
Split-ring grooves located in two places on the sensor allow for adapter mounting at two different insertion depths.

A comprehensive suite of mounting accessories is available for DolpHin™ Series pH sensors, see Product Specification Sheet and Auxiliary Specifications.

Cable Length:
Model Code Selection -Q does not include cable
Standard cable length is 10 feet for Model Code Selections -A and -B
Longer cable lengths are available in increments of 10 feet up to 50 feet maximum length may be optionally selected. Junction box and extension cable are available for longer than 50 feet cable requirements.

Sensor Termination:
Model Code Selection -A provides 10′ integral cable with individual leads terminated with straight-pin, crimped-on lugs.
Model Code Selection -B provides 10′ integral cable terminated with a threaded "quick" connector. This selection requires an extension cable with mating connector.
Model Code Selection -Q provides a threaded "quick" connector integral to the sensor. This selection requires an extension cable with mating connector.

Analyzer/Transmitter Compatibility:
875PH: all DolpHin™ pH Sensors
876PH: all DolpHin™ pH Sensors
873PH: all DolpHin™ pH Sensors, except Temp Comp Types –2, 4, and 5
873APH: all DolpHin™ pH Sensors, except Antimony electrodes and temp comp types -2, 4 and 5
873DPX: all DolpHin™ pH Sensors, except Temp Comp types -2, 4 and 5
870PH and other older transmitters: Contact Foxboro

Temperature/Pressure Rating:
121°C / 100 psi Domed High Temperature Electrode (Electrode Type 1, 2,4)
85°C / 100 psi Flat Glass Electrode (Electrode Type 3)

NOTE: Preamplifier Selection "P" will derate temperature specification to 85°C when sensor is mounted in submersion or insertion type installation. For in-line installation, no derating applies.

Consult "Model Code Selection Guide" in PSS 6-1C3 A for help making sensor selections

How to Order—Specify model number PH10 followed by order code for each selection

pH Electrode Type:					
Domed Glass High Temperature Bulb with Protective Guard	1				
Domed Glass High Temperature Bulb without Protective Guard	2				
Flat Ruggedized Glass	3				
Antimony	4				
Preamplifier:					
None		N			
Internal Preamplifier[1]		P			
Temperature Coninensation:					
2-Wire, 100 Ω Platinum RTD			1		
3-Wire, 1000 Ω Platinum RTD			2		
2-Wire, 100 Ω Platinum RTD, Enhanced Response Speed			3		
3-Wire, 1000 Ω Platinum RTD, Enchanced Response Speed			4		
2-Wire, 3 kΩ Balco RTD			5		
Sensor Termination:					
10 ft (3.05 m) Integral Cable Terminated w/Crimped-on Straight Pin Lugs				A	
10 ft (3.05 m) Integral Cable Terminated w/ Variopin "Quick" Connector[2, 3]				B	
Variopin "Quick" Connector integral to Sensor[2, 3]				Q	
Optional Selections:					
Specify One					
EPDM O-Rings[4]					-E
Chemraz O-Rings[4]					-C
Specify One					
Integral Sensor Cable, 20 ft (6.1 m) long[5]					-2
Integral Sensor Cable, 30 ft (9.1 m) long[5]					-3
Integral Sensor Cable, 40 ft (12.2 m) long[5]					-4
Integral Sensor Cable, 50 ft (15.2 m) long[5]					-5
Integral High-Temp Sensor Cable. 10 ft (3.05 m) long[1, 5]					-1H
Integral High-Temp Sensor Cable, 20 ft (6.1 m) long[1, 5]					-2H
Integral High-Temp Sensor Cable, 30 ft (9.1 m) long[1, 5]					-3H
Integral High-Temp Sensor Cable, 40 ft (12.2 m) long[1, 5]					-4H
Integral High-Temp Sensor Cable. 50 ft (15.2 m) long[1, 5]					-5H

Notes
1 High Temperature cable not available with Preamplifier Code "P
2 Not valid with combination of Preamplifier Code "P" and Temperature Compensation Codes 2 or 4
3 Requires mating patch cord with integral Variopin connector, if not customer supplied
4 Standard 0-Ring material is Viton
5 Cable Options applicable to Sensor Termination Codes "A" and "B" only

EPDM is Ethylene-Propylene Terpolymer, also known as EPR (Ethylene-Propylene Rubber)
Chemraz is a Perfluoro Elastomer

DolpHin™ Series ORP Sensors

The DolpHin™ Series ORP sensor provides highly accurate and stable ORP measurements in process applications. Sensors address process applications from routine to the most severe temperature, and chemical conditions. A comprehensive suite of mounting and wiring accessories make the DolpHin™ Series the easiest to install, calibrate, and service. The sensors are compatible with older analyzers and are fully compatible with the Intelligent Models 875PH & 876PH Transmitters. DolpHin™ Series delivers breakthrough performance in a rugged easy-to-use design.

Ordering Information – Specify

- Model Number from Page 6
- User Tag Information
- Order Separate Items, as needed (see Price Book sections, as noted)
  - ✔ *Analyzer/Transmitter (pH/ORP) (see section 6-1)*
  - ✔ *Accessories and mounting hardware (see section 6-1ZI, page 5 and 6)*
- Certifications as needed

Performance (at Reference Conditions)
Repeatability: ± 3.0 mV

Model Description
Model ORP10 DolpHin Series are a family of high performance ORP sensors with extensive features and accessories. Breakthrough performance in stability, accuracy, and long life makes DolpHin the premier ORP sensor for on-line process application.

High purity precious metal, gold and platinum electrodes with large surface area, makes DolpHin exceptionally stable, accurate, and long lasting, even in the harshest process applications. Every component of the DolpHin sensor has been designed to maximize ease-of-use, long life, and accuracy, including: the precision reference electrode with Nafion ion barrier, ultra fast automatic temperature compensation, and a single rugged body that fits the widest variety of mounting accessories. The elegance of the DolpHin design delivers a single, easy-to-use sensor with unmatched ORP measurement performance.

Standard Specifications

Measuring Electrode:
Platinum ORP, 99.99% Purity
Gold ORP, 99.5 % Purity

Reference Electrode:
Precision double junction with ceramic external process wetted junction and ion-barrier internal junction high temperature Electrolyte Gel. Ag/AgC1 half cell.

Measurement Range: ± 1500 mV

Preamplifier:
Available with Model Code Selection -P; (not required for ORP) Integral, encapsulated, differential high impedance

Integral Temperature Element:
For use with Model 873PH and older Analyzers 2-wire platinum RTD, 100 ohm
For use with 876PH and 875PH Analyzers 3-wire platinum RTD, 1000 ohm
For use with non-Foxboro Analyzers that require Balco 2-wire, 3K Balco RTD, 3000 ohm
Enhanced response: Both 100 ohm and 1000 ohm Pt RTD selections are available in an enhanced speed of response configuration, for applications requiring fast temperature response.

Wetted Parts:
Body: PVDF (Kynar)
Measuring Electrode: Platinum or Gold as specified in Model Code
Reference Junction: Ceramic
O-Rings: Viton is standard; Chemraz or EPDM are optional selections
Solution Ground: Conductive PVDF

Sensor Mounting:
¾ inch NPT on both ends of sensor for direct process connection or submersion.
Split-ring grooves located in two places on the sensor allow for adapter mounting at two different insertion depths.
A comprehensive suite of mounting accessories is available for DolpHin™ Series ORP sensors, see Product Specification Sheet and Auxiliary Specifications.

Cable Length:
Model Code Selection -Q does not include cable
Standard cable length is 10 feet for Model Code Selections -A and -B
Longer cable lengths are available in increments of 10 feet up to 50 feet maximum length may be optionally selected. Junction box and extension cable are available for longer

than 50 feet cable requirements.

Sensor Termination:

Model Code Selection -A provides 10' integral cable with individual leads terminated with straight-pin, crimped-on lugs.

Model Code Selection -B provides 10' integral cable terminated with a threaded "quick" connector. This selection requires an extension cable with mating connector.

Model Code Selection -Q provides a threaded "quick" connector integral to the sensor. This selection requires an extension cable with mating connector.

Analyzer/Transmitter Compatibility:

875PH: all DolpHin™ ORP Sensors
876PH: all DolpHin™ ORP Sensors
873PH: all DolpHin™ ORP Sensors, except Temp Element types -2,4. and 5
873APH: Not Compatible
873DPX: all DolpHin™ ORP Sensors, except Temp Element types -2, 4 and 5
870PH and other older transmitters: Contact Foxboro

Temperature/Pressure Rating: 121°C / 100 psi

NOTE: Preamplifier Selection "P" will derate temperature specification to 85°C when sensor is mounted in submersion or insertion type installation. For in-line installations, no derating applies. Preamp is not usually required for ORP applications.

Consult "Model Code Selection Guide" in PSS 6-1C3 A for help making sensor selections

How to Order—Specify model number 875 followed by order code for each selection

ORP Electrode Type:					
Platinum	-1				
Gold	-2				
Preamplifier:					
None		N			
Internal Preamplifier[1]		P			
Integral Temperature Coninensation:					
2-Wire, 100 Ω Platinum RTD			1		
3-Wire, 1000 Ω Platinum RTD			2		
2-Wire, 100 Ω Platinum RTD, Enhanced Responses Speed			3		
3-Wire, 1000 Ω Platinum RTD, Enchanced Response Speed			4		
2-Wire, 3 kΩ Balco RTD			5		
Sensor Termination:					
10 ft (3.05 m) Integral Cable Terminated w/Crimped-on Straight Pin Lugs				A	
10 ft (3.05 m) Integral Cable Terminated w/ Variopin "Quick" Connector[2, 3]				B	
Variopin "Quick" Connector integral to Sensor[2, 3]				Q	
Optional Selections:					
Specify One					
EPDM O-Rings[4]					-E
Chemraz O-Rings[4]					-C
Specify One					
Integral Sensor Cable, 20 ft (6.1 m) long[5]					-2
Integral Sensor Cable, 30 ft (9.1 m) long[5]					-3
Integral Sensor Cable, 40 ft (12.2 m) long[5]					-4
Integral Sensor Cable, 50 ft (15.2 m) long[5]					-5
Integral High-Temp Sensor Cable. 10 ft (3.05 m) long[1, 5]					-1H
Integral High-Temp Sensor Cable, 20 ft (6.1 m) long[1, 5]					-2H
Integral High-Temp Sensor Cable, 30 ft (9.1 m) long[1, 5]					-3H
Integral High-Temp Sensor Cable, 40 ft (12.2 m) long[1, 5]					-4H
Integral High-Temp Sensor Cable. 50 ft (15.2 m) long[1, 5]					-5H

Notes

1 High Temperature cable not available with Preamplifier Code "P
2 Not valid with combination of Preamplifier Code "P" and Temperature Compensation Codes 2 or 4
3 Requires mating patch cord with integral Variopin connector, if not customer supplied
4 Standard 0-Ring material is Viton
5 Cable Options applicable to Sensor Termination Codes "A" and "B" only

PH12 Series pH Sensor

The Foxboro brand PH12 Series is a family of rugged, yet cost effective pH sensors in the widely used 12 mm form factor. These sensors provide unique design features, such as a built-in nonmetallic solution ground (allowing for sensor diagnostics), available PEEK body and available flat membrane sensing electrode. PH12 sensors provide fast response, long life, and high accuracy and stability. They are used with a popular set of Model FIT12 mounting accessories.

- Durable PEEK body
  - ✔ *Excellent strength and chemical resistance. Longer service life and better resistance to the rigors of maintenance.*
- Best performing flat membrane electrode
  - ✔ *High temperature capability to 125°C greatly expands the range of applications for flat glass.*
  - ✔ *Rugged construction extends service life in the harshest of applications.*
- Non metallic wetted parts
  - ✔ *Sensor is immune to attack from most process fluids, greatly extending the service life.*
- Extreme temperature range
  - ✔ *Temperature range of -25 to +125°C allows one basic sensor to be used for most applications, simplifying inventory.*

Performance (at reference conditions):
Accuracy and stability: ±0.02 pH/24 hours
EMF Efficiency: 98.5 ±1.5%

Standard Specifications:
Measuring Electrode: Domed Glass or Flat Ruggedlzed

Reference Electrode: Precision double junction with ceramic external process wetted junction and lon-barrier internal junction high temperature gel electrolyte. Ag/AgC1 half cell.

Measurement Range: Domed Glass pH Electrode: 0-14 pH
Flat Glass pH Electrode: 0-12 pH

Preamplifier: All PH12 Sensors contain no integral preamplifier

Automatic Temperature Compensation:
3 Wire 100 Ω Platinum RTD
3 Wire 1000 Ω Platinum RTD

Sensor Termination: Variopin quick connector integral to sensor. Requires an extension cable with mating connector.

Analyzer/Transmitter Compatibility: 875PH, 876PH, 873PH[a], 873APH[a]), 873DPX[a], 870PH and other older transmitters[b]

Wetted Parts: Sensor Body: PEEK or Glass, as specified
Measuring Electrode: Domed Glass or Flat Glass
Reference Junction: Ceramic
Outer Reference Solution: Gelled KCI Electrolyte
Process O-Ring and Process Electrode Seal: Vion standard; EPDM optional

Sensor Mounting: Sensor contains integral PG 13.5 threads which permit It to be assembled to a variety of NPT adapters, flanges and sanitary fittings. Refer to FIT12 accessories.

Cable Length: Extension cables with mating Varopin connectors are available from 10′ to 50′. A Junction box with amplifier and extension cable are available for longer than 50′ cable requirements.

Temperature Rating: -25 to +125° C

Pressure Rating: 0 to 150 psig

Notes
a Use temperature compensation selection -1 (100 Ω RTD).
b Contact Foxboro.

How to Order—Specify model number PH12 followed by order code for each selection

Model					
PH12 pH and ORP Sensor - 12 mm Diameter, PG 13.5 Process Connection	PH12				
pH Electrode Type					
pH, 0 to 14 pH, Wide Temperature Range Domed Glass, -25 to +125°C (-13 to +257°F)		1			
pH, 0 to 14 pH, High-Temperature Domed Glass, 0 to 140°C (32 to 284°F)[f]		2			
pH, 0 to 12 pH, Flat Ruggedized Glass, -15 to +125°C (5 to 257°F)		3			
ORP, Platinum, -25 to +125°C (-13 to +257°F)		4			
pH/ORP Combination, 0 to 14 pH and ORP, Wide Temperature Range Domed Glass and Platinum, -25 to +125°C (-13 to +257°F)		A			
pH/ORP Combination, 0 to 14 pH and ORP, High-Temp Domed Glass and Platinum, 0 to 140°C (32 to 284°F)[f]		B			
pH/ORP Combination, 0 to 12 pH and ORP, Flat Ruggedized Glass and Platinum, -15 to +125°C (5 to 257°F)		C			
Sensor Body Material and Length					
Glass Body, 120 mm (4.7 in)			G1		
PEEK Body 120 mm (4.7 in)			P1		
Additional lengths under PEEK Body, 120 mm (4.7in)					
PEEK Body, 225 mm (8.9 in)			P2		
PEEK Body, 360 mm (14.2 in)			P3		
PEEK Body, 425 mm (16.7 in)			P4		
Temperature Compensation					
100 Ω Platinum RID, 3-wire[c]				1	
1000 Ω Platinum RID, 3-wire[c]				2	
Sensor Termination					
Variopin Quick Connector integral to Sensor Body[a]					Q
Optional Selections					
EPDM Process O-Ring Seal and Process Electrode Seal[b]					E
Autoclave Cap[d]					A
Detailed Instruction Manual[e]					M
3-A Compliant[g]					S
PSS Biocompatibllity					B
Per Fluoroelastomer O-Ring Seal & Process Electrode, Seal[b]					P

Examples: PH12–3G12Q–E; PH12-2G21Q-MS

Notes

a A mating Patch Cord with an integral Variopin Quick Connector on one end is required. Refer to the PSS for a selection of Patch Cords and extension cables offered
b The standard process seals are Viton.
c Compatible with Analyzers and Transmitters that accept either 2-wire or 3-wire temperature elements.
d Autoclave cap protects the variopin connections during steam sterilization and autoclaving. The cap is shipped separate from the sensor.
e A CD-ROM and a "Quick-Start" pamphlet are shipped as standard with each sensor.
f High-Temperature domed glass electrode only available with Sensor Body Material Code P (PEEK)
g Electrode Type Codes -1, -2, -3, and -4, when used with option -S, use a stainless steel solution ground

pH Sensors for Pure Water Applications

- EP462A pH sensor for pure water applications down to 1µS/cm
- EP462 Series incorporates features perfect for low conductivity applications

- Features/Benefits
  - ✔ *twist-lock style process connection allows quick and efficient installation and removal of pH sensor*
  - ✔ *low-impedence bulb option for low-conductivity process streams, 1–10 µS/cm*
  - ✔ *double junction reference with self-pressurizing electrolyte resists contamination*
  - ✔ *Kynar twist-lock body with integral bulb guard for tough applications*

Physical Specifications

Model	Special Feature	Mounting	Wetted Materials	pH range	Temperature Limit	Pressure
EP462A	✔ Twist lock mount ✔ Double junction reference ✔ EP462A & C for low conductivity ✔ integral solution ground	✔ ¾ or 1NPT connection via twist lock adapter ✔ EP462A & C use Flow chamber	PVDF Body/low impedance glass/ EPR & Viton O-ring	0-12	100°C	120 psig
EP462B			PVDF Body, Domed glass, EPR & Viton O-ring	0-14	100°C	120 psig
EP462C			PVDF Body/low impedance glass, KALREZ O-ring	0-12	100°C	120 psig
EP462D			PVDF Body, Domed glass, KALREZ O-ring	0-14	100°C	120 psig

Compatible with:
- 876PH Transmitter (including all diagnostics)
- 873PH and DPX Analyzer
- 875PH Analyzer

All sensors have PVDF bodies 100 ohm 3-wire RTDs

How to Order

	Sensors	Accessories
Specify Model Number EP462-		
pH Sensors (for pure water applications to 1µS/cm)		
Low conductivity applications, low impedance bulb, 0-12 pH range, EPR/Viton O-rings	A	
Specify Mounting Accessories		
Twist-lock Mounting Adapter		
Kynar twist-lock adapter, ¾ inch NPT		EP463A
Kynar twist-lock adapter, 1 inch NPT		EP463B
316SS twist-lock adapter, ¾ inch NPT (required for pure water)		EP463C
316SS twist-lock adapter, 1inch NPT		EP463D
Twist-lock Mounting Adapter Cap		
316SS locking cap (non-wetted) for EP463 Series Adapter (recommended)		EP464A
Flow Chamber (125mL/min maximum flow)		
316SS, accepts EP463C adapter ¼ NPT inlet/outlet (required for pure water)		0051180
Twist-lock flow chamber (see note and figure below)		EP463E

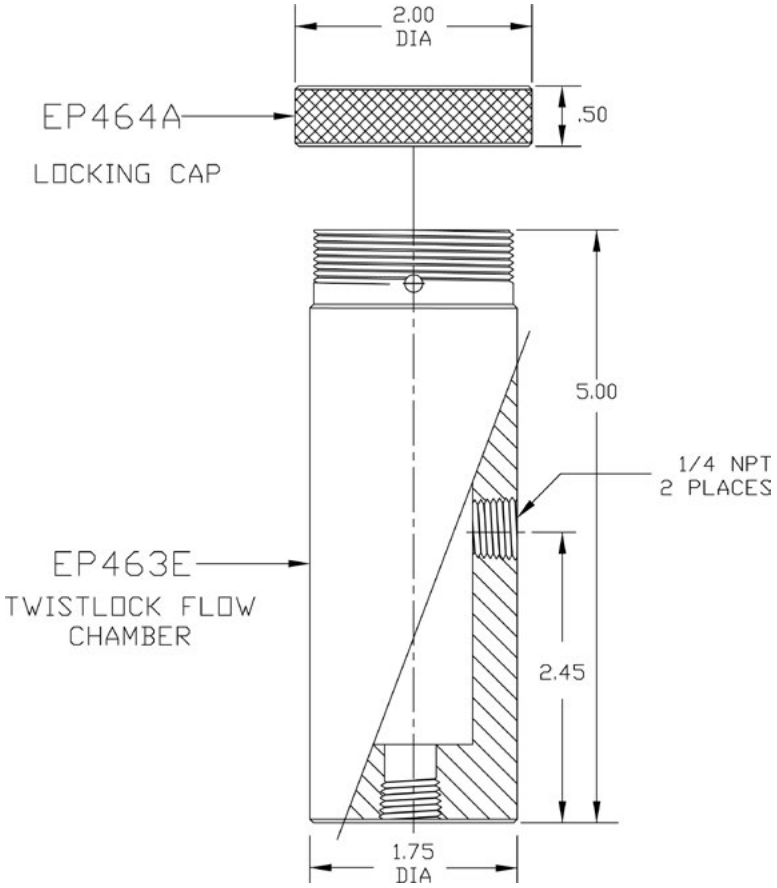

Note
EP463E with EP464A is the recommended installation for EP462A sensor. EP463E combines the features of EP463C and 0051180 into one more cost-effective, easier to use unit.
Note
EP463C and 0051180 are still available.

Special Purpose pH Sensors

EP460 pH sensor with Universal mounting

EP466 pH sensor installed in EP465A Ball valve assembly

- EP460 Series features easy installations for tough applications
- EP466 Series permits an adjustable insertion depth

Physical Specifications

Model	Special Feature	Mounting	Wetted Materials	pH range	Temperature Limit	Pressure
EP460-Series	✔ Universal mount ✔ Triple reference junction ✔ integral solution ground ✔ Refer to computer model	✔ 1 NPT integral thread ✔ 1½ NPT process connection with adapter	PVDF Body, pH glass, EPR & Viton O-ring, KALREZ O-ring available	0-14	100°C	125 psig
				0-13 Flat Glass		

Model	Special Feature	Mounting	Wetted Materials	pH range	Temperature Limit	Pressure
EP466A	✔ Insertion/ Retractable when used with EP465A ball valve assembly	✔ Ball valve has 1½ NPT process connection	PVDF Body, Domed glass, EPR & Viton O-ring	0-14	100°C	100 psig
EP465B			PVDF Body, Flat glass, EPR & Viton O-ring	0-13	100°C	100 psig
EP465C			PVDF Body, Domed glass, KALREZ O-ring	0-14	100°C	100 psig
EP465D			PVDF Body, flat glass, KALREZ O-ring	0-13	100°C	100 psig

Compatible with:
- 876PH Transmitter (including all diagnostics)
- 873PH and DPX Analyzer
- 875PH Analyzer

All sensors have PVDF bodies 100 ohm 3-wire RTDs

How to Order

	Sensors	Accessories
Specify Model Number EP460-		
Measuring Electrode and O-Rings:		
Full range, domed bulb, 0-14 pH range, EPR and Viton O-rings	A	
Ruggedized flat glass, 0-13 pH range, EPR and Viton O-rings	B	
Full range, domed glass, 0-14 pH range, Kalrez O-rings	C	
Ruggedized flat glass, 0-13 pH range, Kalrez O-rings	D	
Platinum ORP electrode, EPR and Viton o-rings	F	
Platinum ORP electrode, Kalrez o-rings	G	
Signal Conditioning:		
No preamplifier	N	
Integral Preamplifier	P	
Optional Features:		
Optional 30 foot integral cable	-3	
Optional 40 foot integral cable	-4	
Optional 50 foot integral cable	-5	
No integral mounting flange and o-rings (required for use in ball valve assembly)	-A	
Optional Mounting Adapter		
Kynar body, with 1½ NPT process connection and 316SS (non-wetted) locking cap (not compatible with sensor option -A)		EP461A
Same as EP461A with all 316SS (not compatible with sensor option -A)		EP461B

Specify Model Model Number EP466-		
pH Sensors (Insertion Type)		
Full range, domed bulb, 0-14 pH range, EPR/Viton O-rings, 2ft cable	A	
Ruggedized flat glass, 0-13 pH range, EPR/Viton O-rings, 2ft cable	B	
Full range, domed glass, 0-14 pH range, Kalrez O-rings, 2ft cable	C	
Ruggedized flat glass, 0-13 pH range, Kalrez O-rings, 2ft cable	D	
Specify Mounting Accessories		
Ball Valve Insertion Assembly		
Ball Valve Insertion Assembly for use with EP466 Series sensors includes junction box, and provides adjustable insertion depth up to 7½ in		EP465A

871EC Series Electrodeless Conductivity Sensors

- Resists Fouling
  - ✔ *virtually eliminates coating problems*
- Chemical-Resistant
  - ✔ *choice of sensor body materials for chemical applications*
- Versatile Mounting
  - ✔ *for submersion and in-line and ball valve insertion*

– For complete sepcifications, refer to product specification sheet PSS 6-3C4A

The 871 EC Series Electrodeless Conductivity Sensors, when coupled with 875 Series, Intelligent Analyzer, or 876EC Series Intelligent Transmitters, or 873EC Series Analyzers, measure conductivity of process solutions.

Specifications

PEEK Sensors, Standard Temperature Versions. Up To 120°C (250°F):

Sensor Body Code	Applications[1]	Full Scale Limits	Wetted Parts	Temperature Limits	Pressure Limits	Temperature Compensator (integral)
SP	This small bore sensor is suitable for the majority of all electrodeless conductivity applications. Its compact size enables it to be mounted in a multitude of methods, including insertion (flange, bushing),retractable, and in situ.	1.0 mS/cm (1000 µS/cm) minimum[2] 2000 mS/cm maximum[3]	Glass-filled PEEK (polyetheretherketone); EPDM or Viton or Kalrez O-rings or Chemraz O-rings, as specified	-5 and +120°C (20 and 250°F)	-0.1 and +1.75 MPa (-15 and +250 psi)	100K thermistor for use with 875EC, or 873EC Series Analyzer, 870EC Series, or 876EC Series Transmitter
RE	This large bore sensor is recommended as a substitute for 871EC-EV Series sensors, both for new and existing installations. Its large bore makes it particularly suitable for measurements with very high levels of fouling materials. (see also "AB" sensors)	1.0 mS/cm (1000 µS/cm) minimum[2] 1000 mS/cm maximum[3]			+300 psi	
LB	This large bore sensor is used for low conductivity measurements where a sensitive range is required. It is often used in place of a conventional contacting conductivity measurement system to reduce maintenance, since fouling from oil, water treatment chemicals, particulates, etc. renders a contacting sensor inoperative.[10]	0.05 mS/cm (50 µS/cm) minimum[2] 50 mS/cm+ maximum				

Peek Sensors, High Temperature Versions, Up To 200°C (392°F):

Sensor Body Code	Applications[1]	Full Scale Limits	Wetted Parts	Temperature Limits	Pressure Limits	Temperature Compensator (integral)
HP	This small bore sensor is identical in size and appearance to the SP sensor above, and may be applied to any of the SP applications which have intermittent or continuously high temperatures.	1.0 mS/cm (1000 µS/cm) minimum[2] 2000 mS/cm maximum[3]	Glass-filled PEEK (polyetheretherketone); EPDM or Viton or Kalrez O-rings or Chemraz O-rings, as specified	-5 and +200°C (20 and 392°F)	-0.1 and +1.75 MPa (-15 and +250 psi)	100 ohm platinum RTD for use with 875EC Intelligent Analyzer 873EC Series Analyzer and 876EC Series Intelligent Transmitter only[4]
BW	This highly specialized, large bore sensor is intended for use in applications with a combination of both high temperatures and very high levels of fouling materials.	1.0 mS/cm (1000 µS/cm) minimum[2] 1000 mS/cm maximum			+300 psi	
UT	This large bore sensor is identical in physical size and appearance to the LB sensor above.[10]	0.05 mS/cm (50 µS/cm) minimum[2] 50 mS/cm+ maximum				

Non-Peek Sensor:

Sensor Body Code	Applications[1]	Full Scale Limits	Wetted Parts	Temperature Limits	Pressure Limits	Temperature Compensator (integral)
NL	This general purpose, small bore sensor may be used for most routine applications involving low (less than 5%) concentrations of inorganic acids (hydrochloric, nitric, sulfuric, etc.), bases (caustic, calcium hydroxide, etc.), and salts (sodium chloride, calcium chloride, sodium sulfate, etc.). Not recommended where organic solvents are present. Not recommended in caustic applications above 50°C (122°F). When doubtful about the effect of high levels of chemicals, temperatures, or abrasion on the NL sensor, specify a type SP PEEK sensor as a preferred alternative.	1.0 mS/cm (1000 µS/cm) minimum[5] 2000 mS/cm maximum	Glass-filled Noryl EPDM O-rings	-5 and +65°C (20 and 150°F)	-0.1 and +1.4 MPa (-15 and +200 psi)	100K Thermistor for use with 875EC Intelligent Analyzer, or 870EC Series Transmitter or 873 EC Series Analyzer or, 876EC Series Transmitter.
TF	Used in oleum and concentrated (greater than 93%) sulfuric acid applications. A sanitary mounting is available as a 2.0 inch Triclamp.		Fluorocarbon head; 316 ss[7] or Carpenter 20cb[8] Hsq., as specified; EPDM or Viton[9] O-rings or Kalrez or Chemraz O-ring as specified	-5 and +105°C (20 and 225°F)		
EV	This large bore sensor has been superseded by PEEK sensor type RE. However, it should still be specified in beet sugar carbonation applications and in pulp and paper applications where a larger bore may prove advantageous.	0.2 mS/cm (200 µS/cm) minimum[5] 2000 mS/cm maximum[6]	Epoxy head; 316 ss extension; EPDM O-rings		-0 1 and +0.7 MPa (-15 and + 100 psi)	
PP	This small bore sensor may be used for most routine applications and for some applications where e.g. PEEK would be unsuitable.	1.0 mS/cm (1000 µS/cm)[5] minimum 2000 mS/cm maximum	Virgin Polypropylene, EPDM, Viton, or Kalrez or Chemraz O-ring	0 and +105°C (32 and 220°F)	200psi @ 80°C linearly derated to 150 psi @ 121°C	100 Ω RTD
PT						100 K Thermistor
AB	Large bore sensor with LinaTer rubber coating. Typical use: mining applications where highly abrasive slurries are encountered.		Linatex rubber coated epoxy sensor with 316 ss extension EPDM O-ring			100K Thermistor for use with 875EC Int. Analyzer, 876EC Int. Transmitter, 873EC Analyzer or 870EC Transmitter

Cable: Integral 6 m (20 ft) multiscreened (multishielded) cable. Irradiated polyolefin jacket for SP, PP, PT, RE, LB, NL, TF, EV and AB; ptfe jacket for HP, BW, and UT.

Mounting: In-line via threaded bushing, flange, or ball valve assembly. Bushing or flange seals against sensor O-ring. In-situ via user-supplied DN 20 or ¾ in pipe. Sensors have ¾ inch connection for mating to user-supplied pipe. ¾ in coupling. Refer to Product Specification Sheet PSS 6-3C4 A

Notes

1 In process fluids at electrical potentials above 30 V rms or 60 V dc, refer to Foxboro for applicable sensor
2 The low end conductivity full scale is for sensors used with 875EC Series Intelligent Analyzer or 873EC Series Analyzers and 876EC Series Transmitters
3 Maximum span for -RE or -BW sensor when used with 873EC is 1000 mS/cm
4 If -HP, -BW, or -UT sensor is to be used with 870EC Series Transmitter, no temperature compensation can be applied, so Temperature Compensation code A must be specified. on 870EC (Analog)
5 This minimum span is for sensors used with 875EC Series Intelligent Analyzer or 873EC Series Analyzers and 876EC Series Transmitters. For minimum spans for sensors used with 870EC Series Transmitters, refer to PSS 6-3C3 A
6 Maximum span for -EV sensor when used with 873EC is 1000 mS/cm
7 AISI Type 316 stainless steel
8 For sulfuric acid (99.5 to 93%) and oleum ranges, use optional Carpenter 20 Cb Housing
9 For sulfuric acid (99.5 to 93%), oleum ranges, and petroleum applications use optional Viton O-rings
10 Foxboro three toroid patent
13 Demountable tri clamp – SP, HP, PP, PT only – other sizes/materials available (see accessories)
14 Demountable tri clamp – LB, RE – contact Foxboro

How to Order—Specify model number 871EC followed by order code for each selection

Sensor Body

Standard Temperature PEEK	SP
Standard Temperature PEEK	RE
Standard Temperature PEEK	LB
High Temperature PEEK	HP
High Temperature PEEK	BW
High Temperature PEEK	UT
NON-PEEK: Noryl	NL
NON-PEEK: Fluorocarbon	TF
NON-PEEK: Epoxy	EV
NON-PEEK: Virgin Polypropylene	PP
NON-PEEK: Virgin Polypropylene	PT
NON-PEEK: LinaTex Rubber Coated	AB

Metallic Wetted Parts

None. For all sensors except TF, EV and AB	0
Carpenter 20 Cb (TF only)	2
316 ss (TF, EV and AB only)	3
316 ss, Sanitary Flange, 2 in integral Tri-Clamp fitting (TF only)	7
316 ss, 2 inch Tri-Clamp fitting, demountable (13, 14)	7

Optional Features

Nonstandard cable length. Recommended limits 1 and 30 m (3 and 100 ft)	3
Viton O-Ring. For all sensors except NL and EV	V
Kalrez O-Ring. For all sensors except NL, EV	K
Chemraz O-Ring. For all sensors except NL, EV	C

Specify cable length, if non-standard

Specify information for instrument tag

Specify mounting option

This product and its components are protected by one or more of the following U.S. Patents 3,806,798 and 5,157,332. Corresponding patents have been issued or are pending in other countries.

Related Products

EP 485 Calibration Plugs

EP 307 Virgin PFA or Virgin PVDF Sensors

871FT Series Non-invasive Sanitary and Industrial Flow-through Conductivity Sensor

The 871FT Toroidal Flow-through Sensors are a family of in-line, non-invasive Sanitary or Industrial sensors that measure the conductivity of virtually any conductive liquid. The 871FT Sensors are available in several common line sizes from 0.5 to 4.0 inches, and offer a selection of materials of construction to accommodate a wide range of sanitary and industrial applications.

- 871FT–Sanitary (3A) approved (74-02) (FDA Compliant)
  - ✔ Selection of Bore Sizes from 0.5 in, 0.75 in, 1.0 in, 1.5 in, 2.0 in, 3.0 in, or 4.0 in
  - ✔ Sanitary 100 ohm or 1000 ohm RTD sensor(s) optional
- 871FT–Industrial
  - ✔ Selection of Bore Sizes from 0.5 in, 1.0 in, 1.5 in, 2.0 in, 3.0 in, or 4.0 in
  - ✔ Industrial 100 ohm or 1000 ohm RTD (½ in NPT) sensors optional

SANITARY

Specifications

871FT—Sanitary Full Scale Range Settings

871FT-1 Sanitary High Range, 871FT-2 Sanitary Low Range:

Sensor Type 871FT-	50	100	µs/ 200	500	1000	50	100	ms/cm 200	500	1000	2000
1E, 2C, 1D				yes	=	=	=	==	=	yes	
2E			yes	=	=	=	=	=	yes		
2F	yes	=	=	=	=	=	=	yes			
2G,2H	yes	=	=	=	=	=	yes				
2J	yes	=	=	=	=	yes					
2D				yes	=	=	=	=	=	1000	
1C					yes	=	=	=	=		yes
1F, 1G			yes	=	=	=	=	=	=	yes	
1J	yes	=	=	=	=	=	=	yes			
1H		yes	=	=	=	=	=	=	yes		

871FT Flow-through—Standard Specifications:

Wetted Bore pc.	O-rings	Pressure (psi)		Temperature °F	°C
Virgin 'PEEK'[1]	N/A	225	at	14 to 250°F	-10 to 121°C (140°C)[30]
PCTFE[2]	N/A	60*	at	14 to 140°F	-10 to 60°C

*linearly derated to 10 psi at 250°F (121°C)

End to End Dimensions[3]:

Line Size Mounting(inches)	Bore Size (inches)	Sanitary face to face[3] (inches)
0.5	0.375	3.0
0.75	0.625	3.0
1.0	0.87	3.6
1.5	1.37	3.6
2.0	1.87	3.6
3.0	2.87	5.0
4.0	3.83	5.0

Notes

1 PEEK–PolyetheretherKetone (virgin) (FDA compliant) (3A Approved)
2 PCTFE–(virgin) PolyChloroTriFluoroethylene (3A Approved)
3 Gasket dimension not included, user supplied

INDUSTRIAL

871FT—Industrial—Full Scale Range Settings
871FT-3 Industrial High Range, 871FT-4 Industrial Low Range:

Sensor Type	µs/cm					ms/cm					
871FT-	50	100	200	500	1000	50	100	200	500	1000	2000
4E	yes	=	=	=	=	=	=	yes			
4F, 4G	yes	=	=	=	=	=	yes				
3E, 3F, 3G					yes	=	=	=	=	=	yes
4H, 4J	yes	=	=	=	=	yes					
3H			yes		=	=	=	=	=	yes	
3J			yes	=	=	=	=	=	yes		
3C				yes	=	=	=	=	=	=	yes
4C		yes	=	=	=	=	=	=	yes		

871FT Flow-through—Standard Specifications:

Wetted Bore pc.	O-rings	Pressure (psi)		Temperature °F	°C
'PEEK'[6]	EPDM[4]	275	at	14 to 140°F	-10 to 60°C
choice of metals[5]		Linearly derated to 190 psi	at	411°F	210°C
PVDF[7]	EPDM[4]	100	at	14 to 140°F	-10 to 60°C
choice of metals[5]		Linearly derated to 10 psi	at	250°F	121°C
PCTFE[8]	EPDM[4]	100	at	14 to 140°F	-10 to 60°C
choice of metals[5]		Linearly derated to 10 psi	at	250°F	121°C

End to End Dimensions:[9]

Line Size Mounting(inches)	Bore Size (inches)	Industrial face to face[3] (inches)
0.5	0.62	4.93
1.0	1.049	4.93
1.5	1.61	4.93
2.0	2.067	5.18
3.0	3.068	5.89
4.0	4.026	6.86

Advantages:

	Advantages to Sanitary Non-Invasive Conductivity	Advantages to Industrial Non-Invasive Conductivity
<16 Micro-inch Interior Bore Finish	X	
Crevice Free Design	X	
Simplifies Clean In Place (CIP)	X	
No Obstruction of Process Flow	X	X
Eliminates Need to Open Line to the Environment to Extract Sensor(s)	X	X
In-Line Calibration	X	often
Not Flow Rate Sensitive	X	X
Significantly Reduces Coatings or Fouling	X	X
Reduces Installation Cost	X	X
Eliminates "Sidewall Effect" Issue	X	X
Eliminates Exposure of Personnel to Hazardous Chemicals	X	X
Broader Selection of Sensor Material		X
Not Flow Direction Sensitive	X	X

Notes
4 Optionally either Viton or Chemraz
5 316 ss, Carp 20 CB3, or Hast C 276
6 PEEK- PolyetheretherKetone (glass filled)
7 PVDF–PolyVinylideneDiFluoroethylene
8 PCTFE–PolyChloroTriFluoroethylene
9 Gasket dimension not included, user supplied

How to Order—Specify model number 871FT followed by order code for each selection

Flow-through Conductivity Sensor: Use with 875EC Intelligent Analyzer, or 876EC Series Intelligent Transmitter, or 873EC or 873AEC Series Analyzers

Sensor Type								
Sanitary, High Range Conductivity	-1							
Sanitary, Low Range Conductivity	-2							
Industrial, High Range Conductivity	-3							
Industrial, Low Range Conductivity	-4							
Nominal Line Size								
English (USA)								
½ in		C						
¾ in Sanitary only		D						
1.0 in		E						
1.5 in		F						
2.0 in		G						
3.0 in[15]		H						
4.0 in[15]		J						
End Connection Material								
None (One-piece Insulator—Sanitary)[24]			-1					
Hastelloy C-276 [14]			-2					
316 ss[14]			-3					
Carp 20—CB3 [14,16]			-4					
90 Cu/10 Ni (per UNS C70600)[14,30]			-9					
Insulator Material								
Virgin 'PEEK' (Sanitary)[13,17]				A				
PVDF[14,18]				B				
PCTFE[18,19]				C				
Glass-filled 'PEEK'[6,14]				D				
End Connection Form								
Tri-Clamp[24]					-1			
Pipe, NTP[12,14,15]					-2			
Flange, ANSI Class 150[14,20]					-3			
Flange, ANSI Class 300[14,23]					-4			
Flange, Flat Face [end connection material selection '9' only][14, 30]					-7			
RTD								
None						C		
1000 ohm RTD (for use with 870ITEC and 875EC)						R		
100 ohm RTD						T		
Cable Options								
Cable length per Sales Order (100 ft maximum recommended length)[31]							-3	
Cable with Lugless Termination (e.g. use with 873 Analyzers)							-4	
Shielded Teflon Cable[26]							-9	
Low Smoke Cable[30]							-N	
Quick Disconnect, Patch cord cable connection[29, 30]							-Q	
O-Ring Options[14]								
Perfluoroelastomer (Chemraz)[21]								-P
Viton[18,21]								-V
Calibration Cable								
Calibration Cable[22,27]									C-

Notes

11 Sanitary—½ inch line uses ¾ inch Tri-clover mounting flange and clamp. 1.0 inch and 1.5 inch line sizes use 1.5 inch Tri-clover mounting flange and clamp.
12 1.0 inch, 1.5 inch and 2.0 inch Industrial may use Flange/NPT pipe adapter (available from Foxboro).
13 Sanitary only (3A approved material and design).
14 Industrial only.
15 3.0 inch and 4.0 inch not available in NPT mounting.
16 Industrial sleeves are Alloy 20, ASTM A-351, Grade CN-7M.
17 FDA compliant.
18 Consider for High Concentration Sulfuric acid or Oleum applications. Choose Carpenter 20 end connection material and Viton O-Ring.
19 Either Sanitary or Industrial (3A Approved for Sanitary).
20 Note that ANSI Temp./psi rating of 275 psi at 140°F (60°C) is linearly de-rated to 190 psi @ 411°F (210°C).
21 Standard O-ring material is EPDM.
22 In-line calibration. (Note: Range specific precision resistance calibration plugs recommended. EP485 Series)
23 Temp./psi rating for 300 lb. ANSI Flange 400 psi to 411°F
24 Sanitary only
26 Provides RFI/EMI protection when used with 875EC Intelligent Analyzer, or 870ITEC Intelligent Transmitter
27 EP485A – Calibration plug, recommended
29 Requires Patch Cord, order separately
30 Contact Foxboro for status
31 For cable lengths > 100 feet, contact Foxboro

Related Products

EP 485 Calibration Plugs

FT10 Series Non-invasive, Non-metallic Flow-through Electrodeless Conductivity Sensor

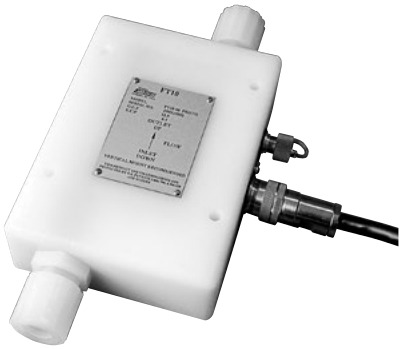

The FT10 all PFA, multi-toroid[1] non-metallic electrodeless conductivity sensors are a family of in-line, non-invasive sensors that provide an accurate measurement of virtually any conductive liquid. The FT10 sensors are offered in industry common line sizes – ½", ¾" and 1.0" and offer Flaretek or Nippon Super Pillar 300 end connections. The FT10 is ideal for, but not limited to, the semiconductor and specialty chemical industries.

- FT10 all PFA[2,4] - non-metallic flowthrough
- All welded seams[3,5] - no o-ring or gaskets
- Ideal for e.g. high purity aggressive acids, etc.
- Unique calibration feature - Foxboro patent
- Unique multi-toroid design feature - Foxboro patent
- Unique integrated RTD feature - Foxboro patent

Specifications

FT10 Full-Scale Range Settings

FT10-MT	08 (½ inch)	2000 microsiemen/cm	to	2000 millisiemen/cm	(ms/cm)
	12 (¾ inch)	500 microsiemen/cm	to	2000 millisiemen/cm	(ms/cm)
	16 (1 inch)	500 microsiemen/cm	to	2000 millisiemen/cm	(ms/cm)
		1 millisiemen/cm = 1000 microsiemen/cm			(ms/cm)

FT10 Wetted material

PFA -	Perfluoroalkoxy Fluorcarbon

FT10 PFA Tubing Sizes

FT10	½ inch	process pressure limits: 0 to 100 psi
	¾ inch	process temperature limits:
	1.0 inch	21 to 284 F (-5 to +140C) *6
		*6 line size specific, linearally derated

FT10 End Connection Types

Flaretek
Nippon Super Pillar 300
Bare End Connection (Accessory)

Notes

1 Foxboro patented design
2 PFA – perfluoro alkoxy fluorocarbon
3 Helium leak checked
4 Vendor material certificate provided
5 Vendor pressure certificate
6 Pressure ratings line size specific and linearly derated

Advantages

Non-Invasive Flow-through Design	Isolates measurement and calibration eliminating exposure of personnel to high purity and/or aggressive chemicals.
All PFA Wetted Material	Ideal for high purity applications e.g. encountered in semi-conductor and specialty chemical applications.
All Welded Seams	No reliance on 0-ring or gasket seals or threads, helium leak checked for validation.
Multi-Turoid Design	Foxboro patent design provides conductivity measurements from double digit to 2,000,000 microsiemen/cm
Unique Calibration Feature	Foxboro patent design provides a high precision in-line calibration with a shirt pocket tool.
Unique RTD Placement Design	Foxboro patent provides an accurate temperature measurement in a design integral to the sensor.
Low Liquid Volume Flow-through Design	Minimal volume of process liquid required for accurate measurement.

How to Order—Specify model number FT10 followed by order code for each selection

FT10 – Noninvasive, nonmetallic, Electrodeless Flow-through conductivity sensor for use with 875EC series Intelligent analyzer and 876EC Intelligent Transmitter

Description
FT10 = Noninvasive, nonmetallic Flow-through sensors FT10

Electrodeless Conductivity
All Teflon Multi-toroid Flow Through Sensor. . . . . MT

Line Sizes
½ inch 8
¾ inch 12
1 inch. 16

End Connection Form[a,b]
Flare Tube Fitting . . . . . F
Nippon Tube Fitting . . . . . N

Termination
Integral Sensor Cable[c] 1
Integral High Temp Sensor Cable[c] 2
Integral Connector[d] 6

RTD
3 - Wire 100Ohm[1] . . . . . T
3 - Wire 1000 Ohm[1] . . . . . R

Options
Wall Mounting Kit[e] 1
Pipe Mounting Kit[H] 2
Cable Length per S/O[f] 3
Specific sensor Geometric Cell Factor[g] 4

Notes
(a) This selection provides the corresponding connection size for the line size selected. For example, selecting Line Size Code 8 (½ line sizes) and End Connection Form N (Nippon Super Pillar 300) results in a ½ inch Nippon Super Pillar 300 Connector.
(b) A bare Teflon PFA tube can be provided for use with the Flare Tube or Nippon Fittings as an accessory. Contact Foxboro.
(c) Standard length integral cable is 10 foot (3m). Specify option –3 for non-standard cable lengths.
(d) Matching patch cord required with integral connector selection. See accessories.
(e) Selecting this option provides the standard mounting kit.
(f) Cable lengths up to 100 foot (30m) may be selected when termination selection 1 or 2 is selected. Not applicable Termination selection 6 (integral connector).
(g) The specific Sensor Geometric Cell factor is determined experimentally at Foxboro. Contact Foxboro.
(h) Selecting this option provides the standard mounting kit with two-inch pipe mounting hardware.

The following chapter contains reduced Product Specifications of the instruments:

SRD960	Intelligent Positioner with HART, PROFIBUS or FOUNDATION Fieldbus – EEx d Explosion Proof
SRD991	Intelligent Positioner with HART, PROFIBUS or FOUNDATION Fieldbus – EEx ia Intrinsically Safe
DTM	SRD991 and SRD960 DTM (Valve Monitor) for configuration and diagnostics. Valve Health Report generator
PST	Partial Stroke Testing for SRD991 and SRD960 LCP960 Local Control Panel for PST monitoring
SRI990	Analog Positioner
SRI986	Electro-Pneumatic Positioner
SRI983	Electro-Pneumatic Positioner – Explosion Proof or EEx d version
SRP981	Pneumatic Positioner
SMI983	Electrical Position Transmitter
SMP981	Pneumatic Position Transmitter
SGE985	Inductive Limit Switch
FRS	Filters regulators
IP24	IP Transducer for field service
	Accessories for Positioners

For detailed technical specifications, visit our homepage www.foxboro-eckardt.com or ask your local distributor for the requested Product Specifications PSS.

SRD960 Intelligent Positioner with HART, PROFIBUS PA or FOUNDATION Fieldbus H1 for EEx d Explosion-proof Application

The intelligent positioner SRD960 is designed to control pneumatic valve actuators and is available in the version EEx d (flame-proof)/explosion-proof. It can be operated from any control systems (e.g. the Foxboro I/A Series System).

All the diagnostics features can be easily configured and displayed by the Positioner DTM (Valve Monitor). Moreover, the Positioner DTM enables to editing of a complete "health" report of the valve with all configuration data and diagnostics.

The positioner is available with HART, Profibus PA or Foundation Fieldbus H1 communication protocols.

The SRD960 also has the capability to control a Partial Stroke Test (PST) that offers operators a tool to identify the trouble-proof function of ESD (Emergency Shut Down) valves.

For complete specifications, refer to Product Specification Sheet PSS EVE0109 A-(en).

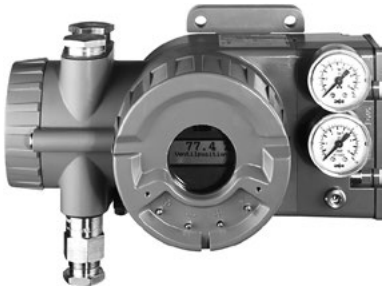

- Display and Local User Interface:
  - Friendly and easy configuration by means of 4 external pushbuttons
  - Multilingual Full-Text Graphic-backlit-LCD
  - Status- and Diagnostic-Messages displayed on LCD
- Accessories
  - Booster
  - Gauges
- Suitable for safety applications up to SIL 3
- Partial Stroke Test (PST) for Emergency Shutdown applications
- Additional Inputs/Outputs (optional):
  - 2 binary outputs (limits)
  - Position feedback 4 to 20 mA, 1 alarm output
  - 2 binary inputs
  - Binary Inputs/Outputs dedicated to SIS logic solvers
  - Built-in independent inductive limit switches or micro switches (optional)
- Autostart with self calibration
- Communication HART, FOUNDATION Fieldbus H1, PROFIBUS-PA
- Diagnostics capabilities
  - Self-diagnostic, status and diagnostic messages
  - Advanced diagnostics for valve predictive maintenance
  - Premium diagnostics for valve footprints, on-line friction, ...
- Configuration by means of local keys, handheld terminal, PC or I/A Series system
- DTM (Valve Monitor) (see page 7-10)
  - DTM for configuration and display of diagnostics capabilities
  - DTM in HART, Profibus PA and FF H1 certified by FDT Group
  - User friendly DTM with "all in one glance" screenshot
  - DTM compliant with FDT Style Guide and NAMUR NE107 recommendation
  - "Valve Health Report" generator included in the DTM
- For all Versions:
  - Stroke range 8 to 260 mm (0.3 to 10.2 in)
  - Angle range up to 95°
  - Supply air pressure up to 6 bar (90 psig), with "Spool Valve" up to 7 bar (105 psig)
  - Single or double acting
  - Mounting on linear actuators according to NAMUR:
    – IEC 534 Part 6
    – VDI/VDE 3847
  - Direct mounting on actuators FlowPak and FlowTop
  - Mounting on rotary actuators acc. to VDI/VDE 3845
  - Protection class IP 66, NEMA 4X
  - Explosion protection:
    – II 2 G EEx d (Flame-proof) according to ATEX
    – Explosion-proof according to FM

Input

With HART communication

Two-wire system

Reverse polarity protection	built-in standard feature
Signal range	4 to 20mA
Operating range	3.6 to 21mA
Voltage	DC 12 to 36 V (unloaded circuit)
Max. load	360 Ohms (7.8 V at 20 mA)
Communication signal	HART, 1200 Baud, FSK modulated on 4 to 20 mA

With Fieldbus communication (acc. to FISCO)

Input signal	digital fieldbus
Supply voltage	DC 9 to 32 V
Operating current (base current)	10.5 mA ±0.5 mA
Current amplitude	±8 mA
Fault current	base current +0 mA (+4 mA by means of independent FDE-safety circuit)

PROFIBUS-PA

Data transfer. . . . . acc. to PROFIBUS- PA profile class B based on EN 50170 and DIN 19245 part 4

Mounting types

NAMUR mounting – left hand

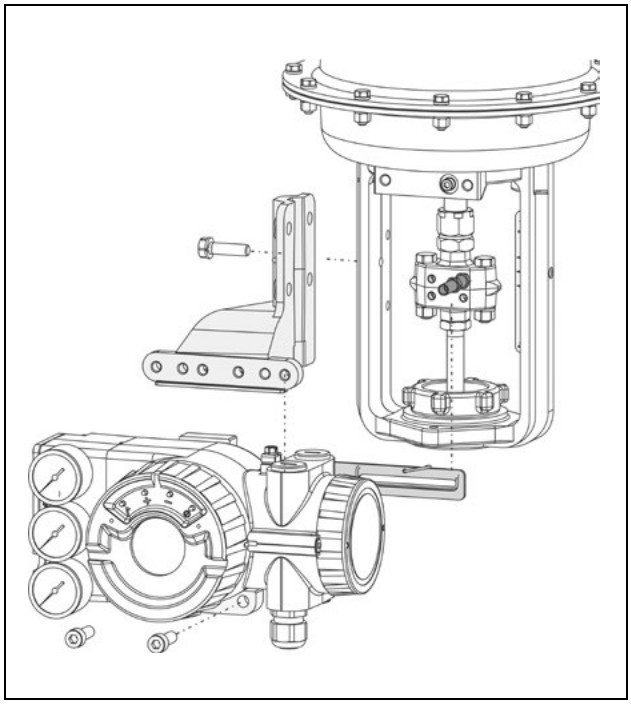

NAMUR mounting – right hand

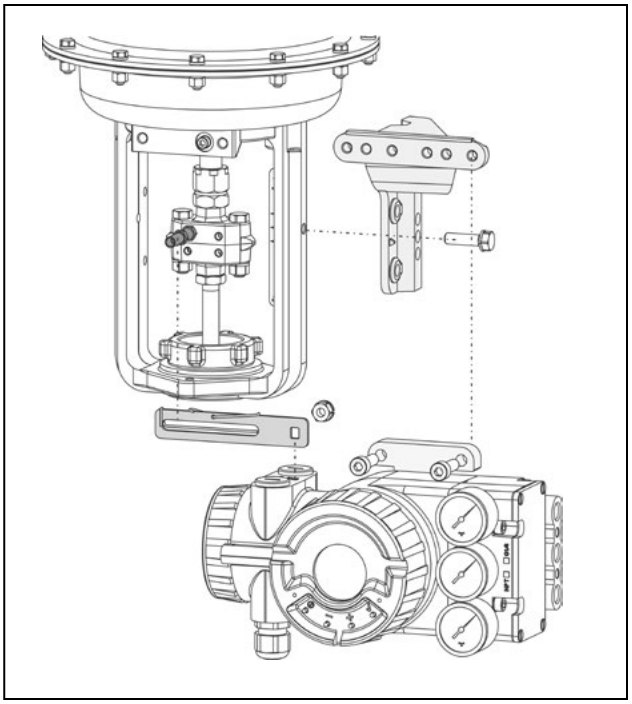

Direct mounting

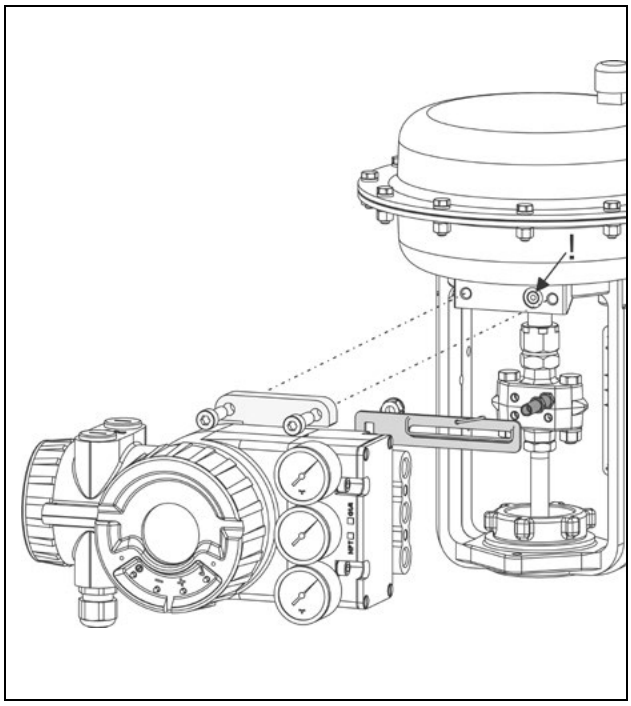

Mounting to rotary actuators

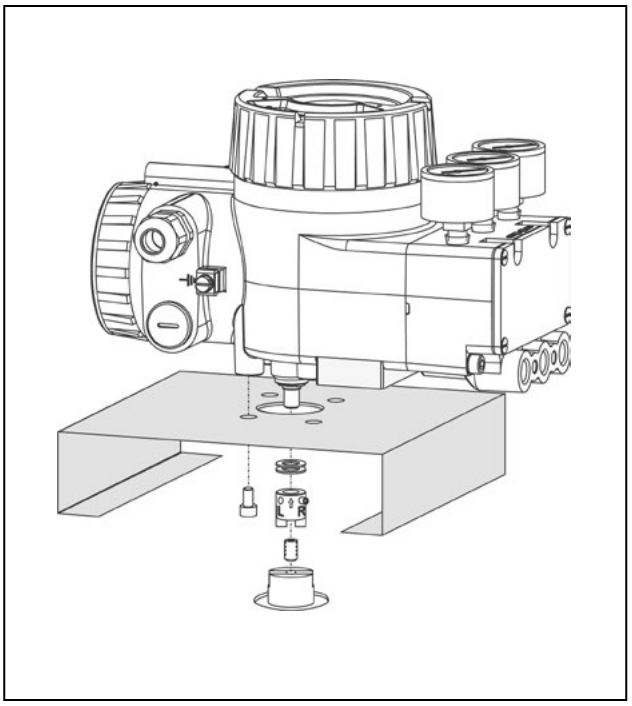

FOUNDATION Fieldbus H1

Data transfer	FF Specification Rev. 1.4, Link-Master (LAS)
Function blocks	PID, AO, 2xDI, DO, IS, OS, AI, MAI

Response characteristic

Sensitivity	<0.1% of travel span
Non-linearity (terminal based adjustment)	<0.4% of travel span
Hysteresis	<0.3% of travel span
Supply air dependence	<0.1%/1 bar (15 psi)
Temperature effect	<0.3%/10 K
Mechanical vibration 10 to 60 Hz up to 0.14 mm, 60 to 500 Hz up to 2 g	<0.25% of travel span

Pneumatic connection

NAMUR mounting	3x female threads ¼-18 NPT or G¼ for pipe diameter 6 to 12 mm (0.24 to 0.47 in)
Direct mounting	Instead of the output y1 an air connection on the backside with O-ring is used (closed at NAMUR mounting).

Electrical connection

Line entry	1or 2cable glands M20 x1.5 or ½-14 NPT (others with Adapter AD-...)
Cable diameter	6 to 12 mm (0.24 to 0.47 in)
Screw terminals	2 terminals for input, 4 terminals for additional inputs/outputs Wire cross section 0.3 to 2.5 mm2 (AWG 22-14)
Test Sockets	for connection of communicator

Supply

Supply air pressure	1.4 to 6 bar (29 to 90 psig)
with spool valve	1.4 to 7 bar (20 to 105 psig)
Supply Air quality	according to ISO 8573-1
Max. particle size and -density	Class 2
Max. oil contents	Class 3

How to Order – Specify model number SRD960

Version				
Single Acting	-B			
Double Acting	-C			
Position Transmitter (w/o pneumatic components)	-T			
Local Control Panel b(LCP960) for PST monitoring	-L			
Input/Communication				
HART (4-20 mA)(g)(p)		H		
Profibus PA based on IEC 1158-2 (MBP) according to FISCO (Fieldbus)(g)(p)		P		
FOUNDATION Fieldbus H1 based on IEC 1158-2 (MBP) according to FISCO (Fieldbus)(g)(p)		Q		
(not applicable)(f)		X		
Additional Inputs/Outputs				
Without Additional Inputs/Outputs(n)(p)			N	
Binary Input – integrated(g)(p)			B	
Binary Output – integrated(g)(p)			P	
Binary Inputs/Outputs (mandatory for ESD application)			E	
Analog Position Feedback (4-20 mA)			Q	
– integrated and connected as Option Board(g)(p)				
– stand alone feedback unit(f)(p)				
Potentiometer Input (for remote mounting – main unit)(g)(p)			D	
Limit Switches (standard version SJ2-N)(g)(p)			T	
Limit Switches (security version SJ2-SN)(g)(p)			U	
Limit Switch (three-wire version)(g)(p)			R	
Mechanical Switches (Micro-Switches)(g)(p)			V	
Display/Indication				
LEDs (cover without window and without external pushbuttons)(p)				S
Grafical LCD (cover with window and with external pushbuttons)(g)				D
LEDs (cover with window and with external pushbuttons)(g)(p)				L
Gauges				
Without Gauges				S
Built-In Gauges with scale in bar/psi(g)(p)				M

Pneumatical Connection						
¼-18 NPT[g][p]	N					
G¼[g][p]	G					
not applicable[f]	X					
Electrical Connection						
½-14 NPT (w/o cable glands or plugs for certified SRD960)		6				
M20 x 1.5 (w/o cable glands or plugs for certified SRD960)		7				
Electrical Certification/Explosion Protection						
Flameproof II 2 G EEx d IIB/IIC T4/T5/T6 according to ATEX (w/o cable glands or plugs)			EDZ			
Explosion-proof according to FM (w/o cable glands or plugs)[g][p]			FDZ			
GOST Approved for Explosion-proof[g][p]			GDZ			
Without Ex (with cable glands and plugs)			ZZZ			
Mounting Preparation on Positioner						
NAMUR acc. to IEC 534-6/direct mounting to Flowserve actuators FlowPak and FlowTop/Rotary Actuators according to VDI/VDE 3845[p]				N		
Rotary actuators according to VDI/VDE 3845[p]				R		
Integrated attachment with air channels on back/rotary actuators according to VDI/VDE 3845[g][p]				T		
Direct mounting acc. to NAMUR VDI/VDE 3847/rotary actuators according to VDI/VDE 3845[a][g][p]				D		
NAMUR acc. to IEC 534-6/rotary actuators according to VDI/VDE 3845				F		
Language						
LCD Language in English/German/French[e][g][p]					A	
LCD Language in English/German/Spanish[e][g][p]					B	
LCD Language in English/German/Portuguese[e][g][p]					C	
LCD Language in English/German/Polish[e][g][p]					D	
LCD Language in English/German/Czech[e][g][p]					E	
LCD Language in English/German/Italian[e][g][p]					F	
LCD Language in English/German/Turkish[e][g][p]					G	
LCD Language in English/German/Swedish[e][g][p]					H	
LCD Language in English/German/Finnish[e][g][p]					J	
LCD Language in English/German/Chinese[a][e][g][p]					K	
LCD Language in English/German/Russian[e][g][p]					L	
LCD Language in English/German/Hungarian[e][g][p]					M	
LCD Language in English/German/Serbian[e][g][p]					N	
LCD Language in English/German/Dutch[e][g][p]					O	
LCD Language in English/German/Romanian[e][g][p]					P	
Without[h][p]					S	
Options						
Diaphram amplifier for double acting positioner[j][p]						-M
Premium diagnostics features (made with built-in pressure sensors) (HART); Built-in pressure sensors (FF, Profibus)[d][g][p]						-B
Infrared Interface for communication by means of IRCOM[d][g][k][p]						-I
Cover for protection of local push buttons[g][k]						-X
Approved for SIL2/SIL3 application[i][p]						-Q
Custom Configuration[g][p]						-T
ATEX application down to -40°C[l]						-F
Certificate EN 10204-2.1 – certificate of compliance with order						-1
Cage Clamp Connection (WAGO) instead of screw terminals[p]						-W
Feedback-unit for remote mounting – version of position transmitter only with a potentiometer[m][p]						-H
Version for ESD valve with PST functionality[b][p]						-E
Tag No. Labeling						
Stamped With Weather Resistant Color						-G
Stainless Steel Label Fixed With Wire						-L

Notes

a Not released
b Only with (additional inputs/ outputs E) and (optional feature -B)
d Not available with Input/ Communication D
e Only with Display/Indication D
f Not with Version -B, Version C
g Not available with Version -T
h Not available with Display/ Indication D
i Only available for Version single-acting -B in connection with Input/Communication D and H
j Only with (Version: C)
k Not in connection with Display/Indication S
l Only with electrica classification EDZ
m Only available with Version T, Input/communication X, additional inputs outputs N, Display S, Gauges S, pneumatical connection X, electrical classification EDZ or GDZ or ZZZ, mounting preparation F, Language S
n With (Version: B, C) or with (Version: T) and (Input: X) and (Optional features: H)
p Not with Version -L

Accessories for Positioners – see EVE9902
Accessories for Instruments – see EOO9001

SRD991 Intelligent Positioner with HART, PROFIBUS PA or FOUNDATION Fieldbus H1 for EEx ia Intrinsically Safe Applications

The intelligent positioner SRD991 is designed to control pneumatic valve actuators and is available in the version EEx ia (Intrinsic Safety) and can be operated from any control systems (e.g., the Foxboro I/A Series system).

All the diagnostics features can be easily configured and displayed by the Positioner DTM (Valve Monitor). Moreover, the Positioner DTM enables editing a complete "health" report of the valve with all configuration and diagnostics data.

The positioner is available with different communication protocols. This includes versions with analog setpoint (4 to 20 mA) and superimposed HART signal; digital with Profibus communication according to PROFIBUS-PA or FOUNDATION fieldbus H1 according to IEC 1158-2 based on FISCO.

The SRD991 also has the capability to control a Partial Stroke Test (PST) that offers operators a tool to identify the trouble-proof function of ESD (Emergency Shut Down) valves.

For complete specifications, refer to Product Specification Sheet PSS EVE0105 A-(en) or PSS EVE0105 E-(en).

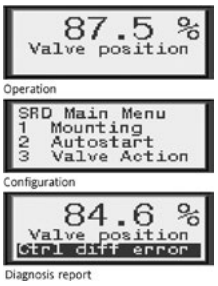

Version "Intelligent"
- Autostart with self calibration
- Self diagnostic, status and diagnostic messages

Version "Intelligent with Communication"
- Communication HART, FOUNDATION Fieldbus H1 or PROFIBUS-PA
- Configuration by means of local keys, Hand Held Terminal, PC or I/A Series system

Version "Intelligent without Communication"
- Input signal 4-20 mA

For all Versions
- Stroke range 8 to 260 mm (0.3 to 10.2 in)
- Angle range up to 95°
- Supply air pressure up to 6 bar (90 psig), with "Spool Valve" up to 7 bar (105 psig)
- Single or double acting
- Mounting on linear actuators according to NAMUR:
  - IEC 534 Part 6
  - VDI/VDE 3847
- Direct mounting on actuators FlowPak and FlowTop
- Mounting on rotary actuators acc. to VDI/VDE 3845
- Protection class IP 66, NEMA 4X
- Explosion protection:
  - II 2 G EEx i / II 2 G EEx n (intrinsic safety) according to ATEX
  - Intrinsic safety according to FM and CSA
- Ambient temperature -40 to 80°C (-40 to 176°F)
- Display and Local User Interface:
  - Multilingual Full-Text Graphic LCD
  - Status- and Diagnostic-Messages displayed on LCD
  - Easy configuration by means of 3 pushbuttons
- Autostart with self-calibration
- Diagnostics capabilities
- Self-diagnostic, status and diagnostic messages
- Advanced diagnostics for valve predictive maintenance
- Premium diagnostics for valve footprint, online friction, ...
- DTM (Valve Monitor) (see page 7-10)
- Suitable for safety applications up to SIL 3
- Partial Stroke Test (PST) for Emergency Shut Down applications
- Infrared Interface for wireless communication
- Stainless Steel housing for Offshore or Food and Beverage applications
- Additional Inputs/outputs (optional):
  - 2 binary outputs (limits)
  - Position feedback 4 to 20 mA, 1 Alarm output
  - 2 binary inputs
  - Built-in independent inductive limit switches (2- 3-wire) or micro switches
  - Sensors for supply air pressure and output pressure
  - Binary Inputs/Outputs dedicated to SIS logic solvers
- Accessories
  - Booster relay to minimize stroke time
  - Gauge Manifold

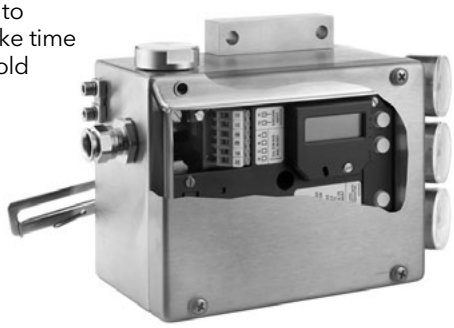

Input

With HART communication

Two-wire system
Reverse polarity protection . . built-in standard feature
Signal range . . . . . 4 to 20 mA
Operating range . . . . . 3.6 to 21 mA
Voltage . . . . . DC 12 to 36 V (unloaded circuit)
Max. load. . . . . 420 Ohms (8.4 V at 20 mA)
Communication signal . . . . . HART, 1200 Baud, FSK modulated on 4 to 20 mA

With Fieldbus communication (acc. to FISCO)

Input signal . . . . . digital fieldbus
Supply voltage . . . . . DC 9 to 32 V
Operating current . . . . . 10.5 mA ±0.5 mA (base current)
Current amplitude . . . . . ±8 mA
Fault current . . . . . base current +0 mA
(+4 mA by means of independent FDE-safety circuit)

PROFIBUS-PA

Data transfer . . . . . acc. to PROFIBUS- PA profileclass B based on EN 50170 and DIN 19245 part 4

FOUNDATION Fieldbus H1

Data transfer . . . . . FF Specification Rev. 1.4, Link-Master (LAS)
Function blocks . . . . . PID, AO, 2xDI, DO, IS, OS, AI, MAI

Without communication 4 to 20 mA

Two-wire system
Reverse polarity protection . . built-in standard feature
Signal range . . . . . 4 to 20 mA
Operating range . . . . . 3.8 to 21.5 mA
Voltage . . . . . DC 8 to 36 V (unloaded circuit)
Max. load . . . . . 300 Ohms (6 V at 20 mA)

Common data for all versions

Supply

Supply air pressure . . . . . 1.4 to 6 bar (29 to 90 psig)
with spool valve . . . . . 1.4 to 7 bar (20 to 105 psig)
Supply air quality . . . . . according to ISO 8573-1
Max. particle size and density . . . .Class 2
Max. oil contents . . . . . Class 3

Response characteristics

Min. Sensitivity . . . . . <0.1% of travel span
Non-linearity
terminal based adjustment <0.4% of travel span
Hysteresis. . . . . <0.3% of travel span
Supply air dependence . . . . . <0.1%/1 bar (15 psi)
Temperature effect . . . . . <0.3%/10 K
Mechanical effect
10 to 60 Hz up to 0.14 mm,
60 to 500 Hz up to 2 g . . . . <0.25 of travel span

Pneumatic connection

NAMUR mounting . . . . . 3x female threads ¼-18 NPT or G¼ for pipe diameter 6 to 12 mm (0.24 to 0.47 in)
Direct mounting . . . . . Instead of output y1 an air connection on the backside with O-ring is used (closed at NAMUR mounting).

Electrical connection

Line entry . . . . . 1 or 2 cable glands M20 x1.5 or ½-14 NPT (with Adapter) (for additional Adapter see AD-...)
Cable diameter. . . . . 6 to 12 mm (0.24 to 0.47 in)
Screw terminals . . . . . 2 terminals for input, 4 terminals for additional inputs/outputs
Wire cross section 0.3 to 2.5 mm2 (AWG 22-14)
Test Sockets. . . . . for connection of communicator

Technical Data for Stainless Steel Housing

Material Stainless Steel . . . . . 1.4404/316, 1.25 mm
Protection Class . . . . . IP 66 acc. to EN 60529
Impact Resistance . . . . . 7 Joule acc. to EN 50014
Seals . . . . . VMQ (Silicone)
Weight (Complete Positioner) . . . . . 3.5 kg
Pneumatic Connection . . . . . 1/4–18 NPT on manifold, prepared for gauges (option)
Electrical Connection . . . . . M20 x 1.5 (others with Adapter AD...)

How to Order – Specify model number SRD991

Version					
Single Acting	-B				
Double Acting	-C				
Input/Communication					
Intelligent without communication (4 - 20 mA)		D			
HART Communication (4 - 20 mA)		H			
PROFIBUS-PA (acc. to FISCO)		P			
FOUNDATION Fieldbus H1 (including PID-Function Block, acc. to FISCO)		Q			
Additional Inputs/Outputs					
Prepared For Additional In-/Outputs			N		
Two Binary Outputs			P		
Position Feedback 4 - 20 mA and one binary output for alarm			F		
Binary Inputs[z]			B		
Binary Inputs-Outputs (mandatory for ESD application)[z]			E		
Built-In Limit Switch					
Without Built-In Limit Switch				S	
Inductive Limit Switch – Intrinsically Safe (Standard Version SJ2-N)				T	
Inductive Limit Switch – Intrinsically Safe (Security Version SJ2-SN)				U	
Inductive Limit Switch – Three wire version[u]				R	
Mechanical Switches (Micro-Switches)/UL- and CSA-approved[u]				V	
Potentiometer Input – CEM Filter (for remote mounting – main unit)[t][k]				D	
Cable Entry					
M20 x 1.5 Without cable gland					1
½"-14 NPT (with adapter(s) M20 x 1.5 to ½"-14 NPT)					6
M20 x 1.5 With one plastic cable gland					7

Electrical Classification	
Without Ex	ZZZ
for Input/Communication D, H[c]	
for Input/Communication H[x]	
EEx ia IIC T4 according to ATEX[c]	EA4
II 2 G EEx ia IIC T6 according to ATEX[d]	EAA
II 2 G EEx ia IIC T4 according to ATEX + Zone 20 Dust[c]	ED4
II 2 G EEx ia IIC T6 according to ATEX + Zone 20 Dust[d]	EDA
FM Nonincendive For Class I, Division 2, Groups A, B, C, D, Hazardous Locations Indoors and Outdoors, NEMA 4X	NFM
for Input/Communication D, H[y]	
FM Approved For Intrinsic Safety Class I, Division 1, Groups A, B, C, D, Hazardous Locations Indoors and Outdoors, NEMA 4X	FAA
for Input/Communication D, H[y]	
CSA Approved for Intrinsic Safety Class I, Division 1, Groups A, B, C, D, Hazardous Locations Indoors and Outdoors, NEMA 4X	CAA
for Input/Communication D, H[y]	
GOST Approved for Intrinsic Safety Exia II CT4[c]	GA4
GOST Approved for Intrinsic Safety Exia II CT6..T4[d]	GAA

Attachment Kit			
Order as Auxiliary	N		
Manifold			
Pneumatic connection ¼–18 NPT made of an additional manifold		Y	
Pneumatic connection G ¼		R	
Options			
Premium diagnostics made with built-in Pressure Sensors[v]			-B
Position free of copperand its alloys[h]			-C
Infrared interface for communication by means of IRCOM[s]			-I
Pneumatic amplifier in the "Spool Valve" version [n]			-S
Approved for SIL2/IL3 application[w]			-Q
Custom configuration			-T
Version of positioner according to VDI/VDE 3847			-N
Version for ESD Valve with PST functionalities[a]			E
Stainless Steel Housing[f]			Z
Stainless Steel Housing without SST gauges			Z1
Top Mounting Version			W
LCD with Menu-Language in English/German/French			-V01
LCD with Menu-Language in English/German/Spanish			-V02
LCD with Menu-Language in English/German/Portuguese			-V03
LCD with Menu-Language in English/German/Polish			-V04
LCD with Menu-Language in English/German/Czech			-V05
LCD with Menu-Language in English/German/Italian			-V06
LCD with Menu-Language in English/German/Turkish			-V07
LCD with Menu-Language in English/German/Swedish			-V08
LCD with Menu-Language in English/German/Finnish			-V09
LCD with Menu-Language in English/German/Chinese[b]			-V10
LCD with Menu-Language in English/German/Russian			-V11
LCD with Menu-Language in English/German/Hungarian			-V12
LCD with Menu-Language in English/German/Serbian			-V13
LCD with Menu-Language in English/German/Dutch			-V14
LCD with Menu-Language in English/German/Romanian			-V15
Tag No. Labeling			
Stamped with weather resistant color			-G
Stainless steel label fixed with wire			-L

Notes

a Only with (Version: B) and (additional Inputs/Outputs: E) and (Optional Feature: -B)
b Not released
c Only with Input/Communication D, H
d Only with Input/Communication H, P and Q
f Available with (Version: C) and (Built-in Limit Switch: S) and (Electrical Classification: ZZZ, EA4, EAA, GA4, GAA) and (Manifold: Y) and (Optional Features: S) or with (Version: B) and (Built-in Limit Switch: S) and (Electrical Classification: ZZZ, EA4, EAA, GA4, GAA) and (Manifold: Y)
h Available with (Version: B) or with (Version: C) and (Optional Features: S)
k Only with Electrical Classification EA4, EAA, ZZZ
n Only with Version -C
s Only available with Optional Feature LCD (-V01 to -Vxx)
t Not with additional Input/Outputs D
v Only available for (Input/Communication F, H, P, Q) and (Electrical Classification ZZZ, FAA, NFM, EAA, CAA, GAA)
w Only available for (Version single-acting -B) and (Input/Communication D, H)
x Only in connection with Optional Features -B
y Not with Optional Features -B
z Not available with Electrical Classification FAA, NFM, CAA

Accessories for Positioners – see EVE9902
Accessories for Instruments – see EOO9001

SRD991 and SRD96O DTM (Valve Monitor) for configuration and diagnostics. Valve Health Report generator

Intelligent Valve Diagnostics for Predictive Maintenance
The valve diagnostic software VALcare™ is available as Device Type Manager (DTM) for integration into control systems based on the Field Device Tool (FDT) technology such as the Foxboro I/A Series system. It is designed to support methods for evaluation of the valve health, operation and configuration. The DTMs support the communication protocols HART, Profibus PA and FOUNDATION Fieldbus H1.

- Data stored inside positioner memory, up to 5 years
- Determination of Stem Friction to prevent leakage and stuck stem
- On Line Friction Histograms
- Partial Stroke Test function for ESD applications
- Diagnosis for failed PST or stuck valve
- Predictive Maintenance capabilities
- Intelligent Alarm Management
- Self surveillance in accordance with NE107
- Service Management
- Histograms for Valve Position and Response History

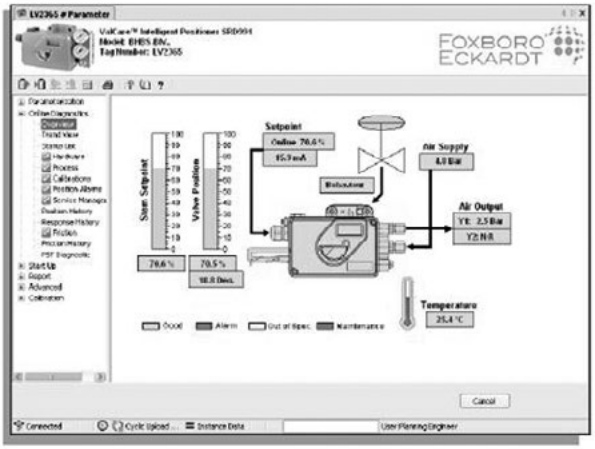

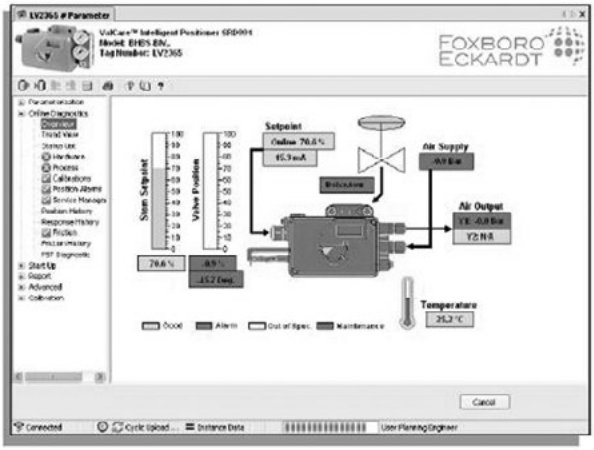

All in one glance!
Ease of use and easy to understand are the principal characteristic of the new VALcare DTM interlace. With one glance, users can identify if the equipment is running well (in green), needs maintenance (in blue), or indicates a failure (in red). The color code complies with NAMUR NE107 standard.

Simple Configuration
The easiest way to configure a valve positioner. All configuration screens have been optimized with intuitive input and graphical elements that make it easy for anyone to configure a valve positioner while minimizing configuration errors.

Valve Footprints

Valve Footprint is an off-line function that defines a reference behavior of the valve/actuator/positioner entity. Several types of signatures are available to define precisely the overall characteristic of the final control element:

- Valve Footprint
- Ramping Signature
- Stepping Signature
- Sensitivity Signature
- On-Line Friction Signature

On Line Friction

An innovative On-Line Friction signature and a Friction calculation are also available to check the valve without disturbing the running process.

With an easy, friendly interface, it is possible to highlight unusual friction.

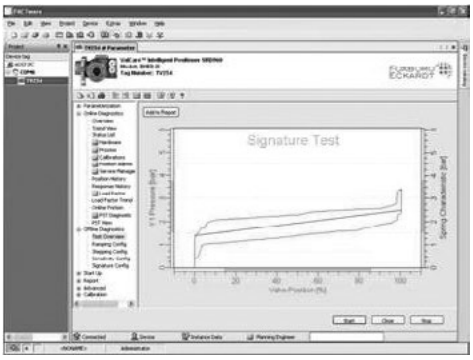

Valve Health Report Generator

With only one click, you can generate a comprehensive and functional valve/positioner report. The 8-page report covers all information regarding the identification, configuration, status, diagnostic state of the positioner-valve combination and of course the valve signature, ramping/stepping/sensitivity signature. For ease of portability and archiving, this report can be printed or stored in PDF format for future reference.

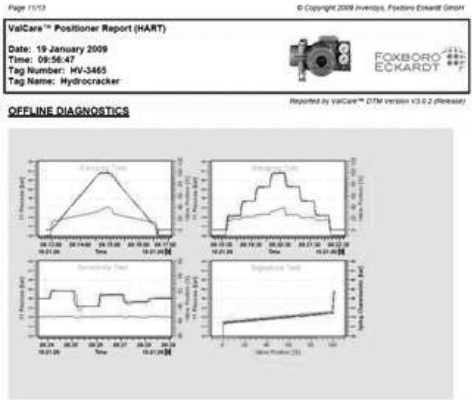

How to order

Advanced Diagnostics is available in every intelligent positioner.

Premium Diagnostics must be selected in the Model code of the device (option -B).

The DTM (Valve Monitor) to configure and read the diagnostics is available free of charge to download from our website.

Eventually the DTM can be ordered (CD-rom) too.

Partial Stroke Testing with SRD991 and SRD960 LCP960 Local Control Panel for PST monitoring

Final control elements in ESD applications such as ON/OFF-, Blow Down- and Venting-Valves remain in one position over a longer time without any mechanical movement. These valves can show the tendency to get stuck and in result might not operate upon demand. This can have a severe impact to the functionality of a Safety System and in result to the operating personnel, plant equipment and the environment. The Partial Stroke Test (PST) offers operators a tool to identify the trouble proof function of such ESD valves. The test can be easily executed via the FDT-DTM based configuration and diagnostic tool ValCare™ and Valve Monitor.

For complete specifications, refer to technical document TI EVE0105 PST.

PST made with intelligent positioners SRD991 for Intrinsically Safe application or SRD960 for Explosion Proof application with specific functionality of PST.

- Supply 24VDC or 4-20mA
- Communication protocols HART, PROFIBUS PA, FOUNDATION Fieldbus H1
- Additional binary inputs and outputs for request from SIS logic solver and feedback status
- FDT-DTM software for configuration and advanced diagnostics (see page 7-10)

Benefits

- Partial Stroke Test (PST) function
- Manual or automatic activation of test
- Freely definable stroke ranges
- On-Line Testing and Diagnosis
- PST Signature by mean of SRD's DTM
- Status- and diagnostic messages displayed on multilingual graphical LCD
- Maintenance alarm in the event of a stuck valve
- Break Pressure trend and Re-inflate time trend for predictive maintenance
- Positioner suitable for use in SIL applications
- Diagnosis date stored in positioner memory
- Positioners can be mounted onto all actuators
- Safety up to SIL 3
- SOV Monitoring with pressure dip detection
- FST (Full Stroke Test) monitoring with trigger capabilities

Activation of Test

- Manually (locally on push button with LCD display or remote)
- Automatic
- Through separate binary input for SIS logic solver
- By means of the LCP96O

Testing Status

- Not Done
- Running
- Restricted
- OK

Status to be visualized on the LCP960.

Status PST available through digital outputs SIS logic solver or external signalization.

Configuration

- Test Interval (Hours)
- Setpoint Change (%) – Limited at maximum 30%
- Setpoint Change (%) can be fixed or random

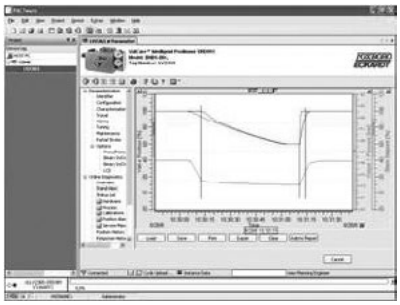

High Safety of the PST

- Maximum Wait Time (Seconds)
- Minimum Pressure (bar) – Minimum pressure between 0 to 6 bars
- Soft PST (Seconds) – Ramp freely configurable up to l00s
- SIL (Safety Integrity Level) – SRD991 ad SRD 960 are suitable for use in a safety related application up to SIL 3 according to IEC 61511-1. Certificate released by Exida
- Configuration Fail Open or Fail Close

Environment Integration

- Full integration into I/A Series system (FBM214 for HART communication) and Avantis CM
- Full integration into any other DCS that supports FDT-DTM standard
- Full integration with Triconex SIS logic solver (Tricon and Trident)
- Full integration with any other SIS logic solver
- Full integration with a HART multiplexer and DCS or stand-alone PC network
- SR991 and SRD960 can be mounted easily onto any ESD (Emergency Shut Down) or ESV (Emergency Shut Vent) valves. Both offer a wide range of mounting kits.

LCP96O Local Control Panel for PST activation and monitoring

- One push button for PST launch
- Backlighted LCD for a better reading in any weather condition
- LCP96O with Explosion Proof certification.
- Can be mounted directly on the near on the Safety valve in the Explosion Proof area.
- Timer to visualized when was done last PST

How to order LCP960

Order under SRD960-LXEDSXxxxxxx

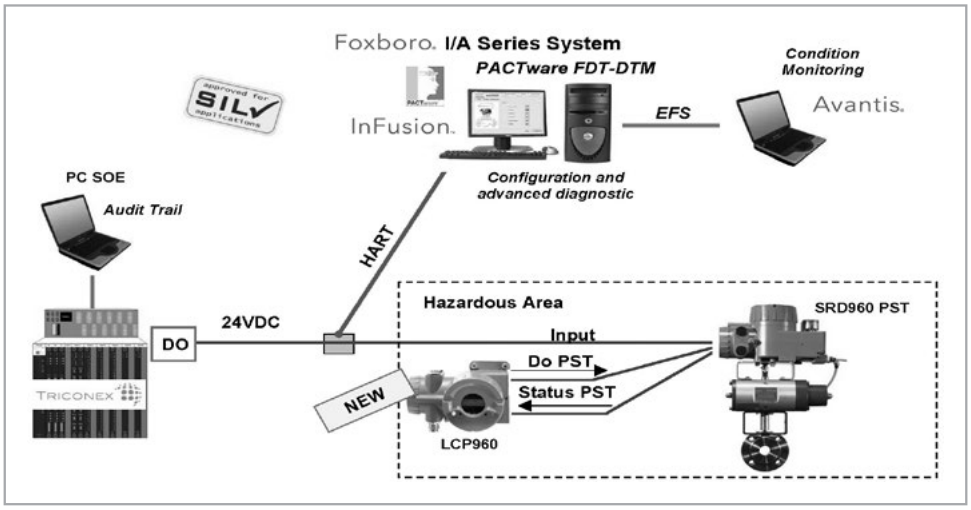

SRI990 Analog Positioner

The Analog Positioner SRI990 with analog input 4 to 20 mA is designed to control pneumatic valve actuators. The modular structure of the SRI990 and SRD991 product lines enables conversion from an analog to an "intelligent" positioner with HART or Fieldbus.

It offers an easy adjustment by means of switches and potentiometers.

For complete specification, refer to Product Specification Sheet PSS EVE0107A-(en).

Input
Two-wire system
Reverse polarity protection . built-in standard feature
Signal range. . . . . 4 to 20 mA
Characteristic of setpoint. . . linear
Operating range . . . . . 3 to 21.5 mA
Voltage . . . . . DC 6 to 36 V (unloaded circuit)
Load. . . . . 300 Ohms, 6 V at 20 mA

Supply
Supply air pressure. . . . . 1.4 to 6 bar (20 - 90 psig)
Supply air . . . . . according to IEC 654-2

Response characteristic
Sensitivity . . . . . < 0.2% of travel span
Non-linearity . . . . . < ±0.8% of travel span
Hysteresis . . . . . < 0.5% of travel span
Temperature effect. . . . . < ±0.5%/10 K
Supply air dependence . . . . < 0.3%/1 bar (15 psi)
Mechanical vibration
10-60 Hz up to 0.14 mm,
60-500 Hz up to 2 g . . . . . < 0.25% of travel span

- Ambient temperature –40 to 80°C (–40 to 176°F)
- Additional Inputs/outputs (optional):
  - Position feedback 4 to 20 mA
  - Built-in independent inductive limit switches (2-/3-wire) or micro switches
- Accessories
  - Booster relay to minimize stroke time
  - Fail Freeze/Fail in place relay
  - Gauge Manifold
- Configuration by means of switches and potentiometers
- Load 300 Ohms
- Low air consumption
- Stroke 8 to 260 mm (0.3 to 10.2 in)
- Angle range up to 95 degree
- Supply air pressure up to 6 bar (90 psig), with "Spool Valve" up to 7 bar (105 psig)
- Single acting or double acting
- Mechanical travel indicator
- Reverse polarity protection and interlock diode
- Switch for Pneumatic Test
- Mounting on linear actuators according to NAMUR:
  - IEC 534 Part 6
  - VDI/VDE 3847
- Direct mounting on actuators FlowPak and FlowTop
- Mounting on rotary actuators acc. to VDI/VDE 3845
- Protection class IP 66 with ATEX and NEMA 4X with FM and CSA
- Explosion protection:
  - II 2 G EEx i/II 2 G EEx n (intrinsic safety) according to ATEX
  - Intrinsic safety according to FM and CSA
- Stainless Steel housing for Offshore or Food and Beverage applications

How to Order – Specify model number SRI990

Version	
Single Acting	-B
Double Acting	-C
Position Transmitter (without pneumatic components)	-T
Input	
Signal Range 4 - 20 mA[h]	I
Not applicable (without Input Signal or Pneumatics)[f]	X
Additional Inputs/Outputs	
Without Additional Inputs/Outputs[q]	M
Position Feedback 4 - 20 mA	Q
Built-In Limit Switch	
Without Built-In Limit Switch	S
Inductive Limit Switch – Intrinsic Safe (Standard Version SJ2-N)	T
Inductive Limit Switch – Intrinsic Safe (Security Version SJ2-SN)	U
Inductive Limit Switch (Three Wire Version)[g]	R
Mechanical Switches (Micro Switches) / UL- and CSA-approved[g]	V
Potentiometer Input (for Remote Mounting – main unit)[z]	D
Cable Entry	
½"-14 NPT (with Adapter(s) M20x1.5 to ½"-14 NPT)	6
M20 x 1.5 With One Plastic Cable Gland	7
Electrical Classification	
Without Ex	ZZZ
II 2 G EEx ia IIC T6 according to ATEX	EAA
II 3 G EEx ia IIC T6 according to ATEX + Zone 20 Dust	EDA
FM Approved Nonincendive For Class I, Division 2, Groups A, B, C, D, E, F & G Hazardous Locations Indoors And Outdoors, NEMA 4X[k]	NFM
FM Approved For Intrinsic Safety Class I, Division 1, Groups A, B, C, D, E, F & G Hazardous Locations Indoors And Outdoors, NEMA 4X[k]	FAA
CSA Approved For Intrinsic Safety Class I, Division 1, Groups A, B, C, D, Hazardous Locations Indoors And Outdoors, NEMA 4X[b][k]	CAA
GOST Approved For Intrinsic Safety	GAA
Options	
Pneumatic connection 1/4–18 NPT made of an additional manifold[p]	-Y
Pneumatic connection G 1/4[p]	-R
Positioner free of copper and its alloys[i]	-C
Pneumatic Amplifier in the Version "Spool Valve"[e]	-S
Approved for SIL2/SIL3 application[l]	-Q
Version of Positioner according to VDI/VDE 3847	-N
Feedback-Unit for Remote Mounting – Version of Position Transmitter only with a potentiometer[f][k]	-H
Version of Position Transmitter with additional cable connections for solenoid-valve-connection[f]	-D
Certificate EN 10204-2.1 – Certificate of compliance with the order	-1
Stainless Steel Housing[n]	-Z
Stainless Steel Housing without SST gauges[n]	-Z1
Top Mounting version	W
Tag No. Labeling	
Stamped With Weather Resistant Color	-G
Stainless Steel Label Fixed With Wire	-L

Notes

b On request
d Not released
e Only with Version -C
f Only with Version -T
g Not available with Electrical Classification EAA, ED3, NFM, FAA, CAA, GAA
h Not available with Version -T
i Available WITH (Version: B) OR WITH (Version: C) AND (Optional Features: S)
k Not available with Additional Inputs/Outputs Q
l Only available for Version single-acting -B
n Available WITH (Version C) AND (Built-in Limit Switch: S) AND (Electrical Classification: ZZZ, EAA, GAA) AND (Optional Features: S) OR WITH (Version: T) AND (Built-in Limit Switch: S) AND (Electrical Classification: ZZZ, EAA, GAA) OR WITH (Version: B) A
p One of the option -Y or _R is mandatory to be select
q WITH (Version: B, C) OR WITH (Version:T) AND (Input: X) AND (Optional Features: H) OR WITH (Version: T) AND (Input: X) AND (Built-in Limit Switch: T, U, R, V)
z Not available with Electrical Classification FAA, NFM, CAA

SRI986 Electro-Pneumatic Positioner

The SRI986 Positioner is designed to control pneumatic valve actuators from control systems and electrical controllers with electric control signals.

It is used to reduce the adverse effects of valve friction, for higher thrust and shorter positioning time.

It offers an easy adjustment by two mechanical screws.

For complete specification, refer to Product Specification Sheet PSS EVE0102 A-(en).

- Independent adjustment of stroke range and zero
- Adjustable amplification and damping
- Split range up to 3-fold possible
- Input Signal from 0 to 20 mA or 4 to 20 mA
- Supply pressure up to 6 bar (90 psig)
- Single or double acting
- Low vibration effect in all directions
- Mounting on linear actuators according to NAMUR: IEC 534 Part 6
  Stroke range 8 to 100 mm (0.3 to 4 in)
  (larger strokes on request)
- Mounting on rotary actuators acc. to VDI/VDE 3845 for rotation angles up to 120°
  - Angular range
    linear: 30° to 120°
    equal percentage: 90°; linear from 70°
- Protection class IP54 or IP65
- Explosion protection:
  - II 2 G EEx i (intrinsic safety) according to ATEX
  - Intrinsic safety according to FM and CSA
- Ambient temperature* –40 to 80°C (–40 to 176°F)
- EMC in accordance with the international standards and laws (CE)
- Additional Inputs / outputs (optional):
  - Position feedback 4 to 20 mA
  - Built-in independent inductive limit switches (2-/3-wire) or micro switches
- Accessories
  - Booster relay to minimize stroke time
  - Fail Freeze/Fail in place relay
  - Gauge Manifold

Input

Signal range . . . . . .0 to 20 mA/4 to 20 mA
Input resistance . . . . . .< 200 Ohms at 20°C

Supply

Supply air pressure . . . . . .1.4 to 6 bar (20 to 90 psig)
Supply air. . . . . .free of oil, dust, water according to IEC 654-2

Pneumatic connection

Female threads . . . . . .G 1/8 acc. to ISO 228

Response characteristic

Amplification. . . . . .adjustable
Sensitivity. . . . . .<0.1% F.S.
Non-linearity (terminal based adjustment). . . . . .<1.0% F.S.
Hysteresis . . . . . .<0.3% F.S.
Supply air dependency. . . . .<0.3%/0.1 bar (1.5 psi)
Temperature effect . . . . . .<0.5%/10 K
Mechanical vibration
10-60 Hz up to 0.14 mm,
60-500 Hz up to 2 g. . . . . .<0.25% of travel span

* dependent on Ambient Temperature classes

How to Order – Specify model number SRI986

Version	
Single Acting	-B
Double Acting	-C
Input	
Signal Range 4 - 20 mA	-I
Mode of Action	
Standard Version Increasing Input Increases Output	D
Universal Version Set To Increasing Input Decreases Output	R
Built-In Limit Switch/Position Transmitter	
Without	S
Inductive Limit Switch Three-Wire Technique, Without Explosion Protection[a]	R
Inductive Limit Switch (Standard Version)[a]	T
Inductive Limit Switch (Security Version)[a]	U
Two Micro Switches, Without Explosion Protection[a]	V
Position Transmitter 4-20 mA[a]	F
Cable Entry	
½"-14 NPT (with Adapter(s) M20x1.5 to ½"-14 NPT)	6
M20 x 1.5 With One Plastic Cable Gland, Color Gray	7
Electrical Certification: (Only Standard Device)	
II 2 G EEx ia IIC T6 according to ATEX[d]	EAA
FM Approved For Intrinsic Safety Class I, Division 1, Groups A,B,C,D Hazardous Locations Indoors	FAA
CSA Approved For Intrinsic Safety Class I, Division 1, Groups A,B,C,D Hazardous Locations Indoors	CAA
GOST Approved for Intrinsic Safety	GAA
Without	ZZZ
Attachment Kit	
Order as Auxiliary	N
Manifold	
Order as Auxiliary	A
Options	
Amplifier Free Of Nonferrous Metals[a, b]	-C
Protection Class IP65	-F
Designed For Auxiliary Energy Oxygen Max 6 Bar	-S
Tag No. Labeling	
Stamped With Weather Resistant Color	-G
Stainless Steel Label Fixed With Wire	-L

Notes

a Not available with FAA & CAA
b Only available with Version -B
d Not available with Limit Switch Codes R, V

Auxiliary – see EVE9902
Fittings – see EOO9001

SRI983 Electro-Pneumatic Positioner – explosion proof or EEx d version

The SRI983 Positioner is designed to control pneumatic valve actuators from control systems and electrical controllers with electric control signals.

It is used to reduce the adverse effects of valve friction, for higher thrust and shorter positioning time.

It offers an easy adjustment by two mechanical screws.

For complete specification, refer to Product Specification Sheet PSS EVE0103 A-(en).

- Independent adjustment of stroke range and zero
- Adjustable amplification and damping
- Split range up to 3-fold possible
- Input Signal from 0 to 20 mA or 4 to 20 mA
- Supply pressure up to 6 bar (90 psig)
- Single or double acting
- Low vibration effect in all directions
- Mounting on linear actuators according to NAMUR: IEC 534 Part 6
  Stroke range 8 to 100 mm (0.3 to 4 in)
  (larger strokes on request)
- Mounting on rotary actuators acc. to VDI/VDE 3845 for rotation angles up to 120°
  - Angular range
    linear: 30° to 120°
    equal percentage: 90°; linear from 70°
- Protection class
  - Pneumatic Unit IP54 or IP65
  - Electrical Unit IP65 with ATEX and NEMA 4 with FM and CSA
- Explosion protection:
  II 2 G EEx d (flameproof) according to ATEX
  explosion proof according to FM and CSA
- Ambient temperature* –40 to 80°C (–40 to 176°F)
- EMC in accordance with the international standards and laws (CE)

* dependent on Ambient Temperature classes

Input

Signal range . . . . . .0 to 20 mA / 4 to 20 mA
Input resistance . . . . . .<260 Ohms
Stroke range . . . . . .8 to 100 mm (0.3 to 4 in)
Angular range
linear. . . . . .30° to 120°
equal percentage. . . . . .90°; from 70° linear

Response characteristic

Amplification. . . . . .adjustable
Sensitivity. . . . . .<0.1% F.S.
Non-linearity
(terminal based adjustment) <1.0% F.S.
Hysteresis . . . . . .<0.3% F.S.
Supply air dependency. . . . .<0.3%/0.1 bar (1.5 psi)
Temperature effect . . . . . .<0.5%/10 K
Mechanical vibration
10-60 Hz up to 0.14 mm,
60-500 Hz up to 2 g. . . . . .<0.25% of travel span

Supply

Supply air pressure . . . . . .1.4 to 6 bar (20 to 90 psig)

Pneumatic connection

Female threads. . . . . .Q ¼-18 NPT
acc. to DIN 45 141

Materials

Base plate, manifold, I/P-housing,
rotation adapter . . . . . .Aluminum (Alloy No. 230)
finished with DD-varnish
Cover . . . . . .impact resistant polyester
All moving parts of:
feedback system. 1.4305/1.4571
mounting bracket. 1.4301

How to Order – Specify model number SRI983

Version							
Single Acting	-B						
Double Acting	-C						
Input							
Signal Range 4 - 20 mA		-I					
Mode of Action							
Increasing Input Increases Output			D				
Increasing Input Decreases Output			R				
Gauges							
Without Gauges				L			
Two Built-In Gauges (bar/psi)[a]				M			
Two Built-In Gauges (kPa/psi)[a]				N			
Electrical Certification							
II 2 G EEx d IIC T6					EDZ		
FM Approved For Explosionproof Class I, Division 1, Groups B,C,D, Dust-Ignitionproof, Class II, Division 1, Groups E, F,G Hazardous Locations					FDZ		
CSA Approved For Explosionproof Class I, Division 1, Groups B,C,D, Dust-Ignitionproof, Class II, Division 1, Groups E, F,G Hazardous Locations					CDZ		
Pneumatic Connection							
Rear Facing NPT ¼, Prepared For Linear Actuators						Q	
Down Facing NPT ¼, Prepared For Rotary Actuators						N	
Tag No. Labeling							
Stamped With Weather Resistant Color							-G
Stainless Steel Label Fixed With Wire							-L

Note

a Only available with Version -B

Auxiliary – see EVE9902
Fittings – see EOO9001

SRP981 Pneumatic Positioner

The SRP981 Positioner is designed to control pneumatic valve actuators with pneumatic control signals.

It is used to reduce the adverse effects of valve friction, for higher thrust and shorter positioning time.

It offers an easy adjustment by two mechanical screws.

For complete specification, refer to Product Specification Sheet PSS EVE0101 A-(en).

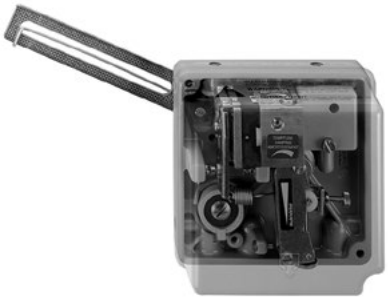

- Independent adjustment of stroke range and zero
- Adjustable amplification and damping
- Split range up to 4-fold possible
- Input Signal from 0.2 … 1 bar (3 … 15 psig)
- Supply pressure up to 6 bar (90 psig)
- Single or double acting
- Low vibration effect in all directions
- Mounting on linear actuators according to NAMUR: IEC 534 Part 6
  Stroke range 8 to 100 mm (0.3 to 4 in)
  (larger strokes on request)
- Mounting on rotary actuators acc. to VDI/VDE 3845 for rotation angles up to 120°
  - Angular range
    linear: 30° to 120°
    equal percentage: 90°; linear from 70°
- Ambient temperature –40 to 80°C (–40 tp 176°F)
- Protection class IP54 or IP65
- Explosion protection:
  II 2 G EEx c (constructive safety) + Accessories in II 2 G EEx i according to ATEX
- Stainless Steel housing (optional)
- Additional Inputs/outputs (optional):
  - Position feedback 4 to 20 mA
  - Built-in independent inductive limit switches (2-/3-wire) or micro switches
- Accessories
  - Booster relay to minimize stroke time
  - Lock-in relay (in case of lost air supply)
  - Gauge Manifold
- Gauges (optional)
  - External gauge manifolds
  - Integrated gauges
    Indicating ranges:
    Input 0 to 1.6 bar (0 to 23 psig)
    Output 0 to 10 bar (0 to 150 psig)

Input

Signal range . . . . . .0.2 to 1 bar (3 to 15 psig) or split range down to Δw 0.2 bar (3 psi)

Response characteristic

Amplification. . . . . .adjustable
Sensitivity. . . . . .<0.1% F.S.
Non-linearity
(terminal based adjustment) <1.0% F.S.
Hysteresis . . . . . .<0.3% F.S.
Supply air dependency. . . . .<0.3% / 0.1 bar (1.5 psi)
Temperature effect . . . . . .<0.5% / 10 K
Mechanical vibration
10-60 Hz up to 0.14 mm,
60-500 Hz up to 2 g. . . . . .<0.25% of travel span

Supply

Supply air pressure . . . . . .1.4 to 6 bar (20 to 90 psig)
Supply air. . . . . .free of oil, dust, water according to IEC 654-2

Connection

Pneumatic . . . . . .Female threads G ⅛ acc. to ISO 228

Materials

Base plate . . . . . .Aluminum (Alloy No. 230) finished with DD-varnish
All moving parts of:
feedback system. 1.4305/1.4571
mounting bracket. 1.4301

7

How to Order – Specify model number SRP981

Version	
Single Acting	-B
Double Acting	-C
Input	
Signal Range 0.2 to 1 bar/3 to 15 psi/ 20 - 100 kPa; Split-Range Up To 4-Fold Possible, Must Be Specified	-I
Mode of Action	
Increasing Input Increases Output	D
Increasing Input Decreases Output	R
Gauges	
Without Gauges	L
Two Built-In Gauges (bar/psi)[a]	M
Two Built-In Gauges (kPa/psi)[a]	N
Built-In Limit Switch/Position Transmitter	
Without	S
Inductive Limit Switch Three-Wire Technique, Without Explosion Protection[b]	R
Inductive Limit Switch (Standard Version) with Expl. Prot. II 2 G EEx ia IIC T6 acc. to ATEX[b]	T
Inductive Limit Switch (Security Version) with Expl. Prot. II 2 G EEx ia IIC T6 acc. to ATEX[b]	U
Two Micro Switches, Without Explosion Protection[b]	V
Position Transmitter 4-20 mA, with Expl. Prot. II 2 G EEx ia IIC T6 acc. to ATEX[b]	W
Cable Entry	
Without Cable Gland	1
M20 x 1.5 With One Plastic Cable Gland, Color Gray[c]	7
Attachment Kit	
Order as Auxiliary	N
Manifold	
Order as Auxiliary	A
Options	
Amplifier Free Of Nonferrous Metals[a]	-C
Manual Bypass Switch[a]	-T
Protection Class IP65[b]	-F
Assembled Free Of Oil And Grease / Designed for Aux. Energy Oxygen	-S
Tag No. Labeling	
Stamped With Weather Resistant Color	-G
Stainless Steel Label Fixed With Wire	-L

Notes

a Only available with Version -B
b Not available with Gauge Code M or N
c Not available with Built-In Limit Switch / Position Transmitter Code S

Auxiliary – see EVE9902
Fittings – see EOO9001

SMI983 Electrical Position Transmitter

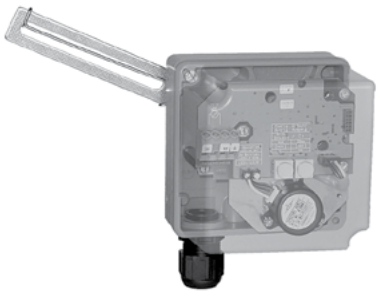

The electrical position transmitter SMI983 converts the linear or rotary movement of a valve/actuator into a 4 to 20 mA standard electrical signal. The configuration of the feedback signal in correspondence to the position of the actuator is easily performed by the two push-buttons.

For complete specifications, refer to Product Specification Sheet PSS EVE0202 A-(en).

- Non-reactive conversion of valve-/actuator-position into a load-independent 4 to 20 mA DC signal
- Two-wire circuit
- Easy adjustment of zero and span by two push buttons
- Operating condition is displayed by two LEDs
- Easy configuration of the feedback signal from 'direct' to 'reverse'
- The feedback signal can be randomly adjusted between 4 to 20 mA
- Wear-free, high linear scanning with conductive plastic precision potentiometer
- Mounting on linear actuators according to NAMUR: IEC 534 Part 6
  Stroke range 8 to 100 mm (0.3 to4 in)
  (larger strokes on request)
- Mounting on rotary actuators acc. to VDI/VDE 3845 for rotation angles up to 120°
  - Angular range
    linear: 30° to 120°
    equal percentage: 90°; linear from 70°
- Protection class IP54 or IP65
- Explosion protection:
  - II 2 G EEx i (intrinsic safety) according to ATEX
  - Intrinsic safety according to FM (in preparation)
- Ambient temperature* –40 to 80°C (–40 to 176°F)
- EMC in accordance with international standards and laws (CE)

* dependent on Ambient Temperature classes

Power supply

Supply voltage . . . . . .12 to 36 V dc
Permitted ripple . . . . . .<10% p.p.
Supply voltage dependency .<0.2%
Supply (via signal circuit) . . .eg. FOXBORO ECKARDT-Power supply unit

Response characteristic

Non-linearity (terminal based adjustment) . . . . . .<1% F.S.
Hysteresis . . . . . .<0.5% F.S.
Load dependency . . . . . .<0.2%/.RBmax.
Temperature effect . . . . . .<0.3%/10 K
Mechanical vibration
10-60 Hz up to 0.14 mm,
60-500 Hz up to 2 g. . . . . .<0.25% of travel span

Electrical connection

Line entry. . . . . .1 cable gland M20 x1.5
Cable diameter. . . . . .6 to 12 mm (0.24 to 0.47 in)
Screw terminals . . . . . .3 terminals for additional
Wire cross section . . . . . .0.3 to 2.5 mm^2 (AWG 22-14)

Auxiliary – see EVE9902
Fittings – see EOO9001

How to Order – Specify model number SMI983

Output
Signal Range 4 - 20 mA . . . . . -I

Cable Entry
M20 x 1.5 With One Plastic Cable Gland, Color Gray. 7

Explosion Protection
II 2 G EEx ia IIC T6 according to ATEX. . . . . .EAA
Without . . . . . .ZZZ

Attachment Kit
Order as Auxiliary . . . . . .N

Options
Tag No. Labeling
Stamped With Weather Resistant Color . . . . . -G
Stainless Steel Label Fixed With Wire . . . . . -L

SMP981 Pneumatic Position Transmitter

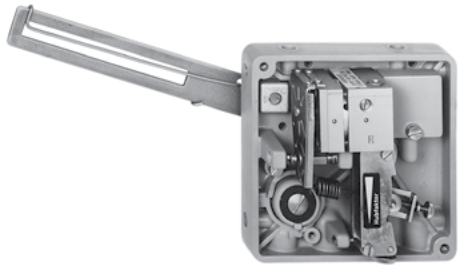

For the conversion of linear or rotary movements of actuators into a 0.2 to 1 bar pneumatic signal.

For complete specifications, refer to Product Specification Sheet PSS EVE0203 A-(en).

- Force balance system
- Additional limit signaling by means of inductive alarm units
- Mounting kits for linear and rotary movements actuators
- Universal matching to all strokes by means of differing range springs
- Simple installation and adjustment. Zero and range settings non-interactive
- Robust, corrosion-protected design, protection class IP54 or IP65
- Ambient temperature –25 to 80°C (–13 to 176°F)
- Explosion protection II2 G EEx c (constructive safety)

Input

Stroke 8 to 115 mm
Angle . . . . . .30 to 120 degree

Output

Signal range . . . . . .0.2 to 1 bar (3 to 15 psi)or split range

Performance characteristics

Non-linearity (terminal based adjustment) . . . . . .<±1% of final value
Hysteresis . . . . . .<1%
Supply press. dependency. .<0.2%/0.1 bar
Sensitivity . . . . . .<0.05%
Temperature effect . . . . . .0.3%/10 K
Air capacity . . . . . .2200 l/hr

How to Order – Specify model number SMP981

Output

Signal range 0.2-1 bar/3-15 PS /20-100 kPa . . . . . .-I

Attachment kit

Order as auxiliary . . . . . .N

Options

Tag.No. Labeling

Stamped with weather resistant color . . . . . -G
Stainless steel label fixed with wire. . . . . -L

Auxiliary – see EVE9902
Fittings – see EOO9001

SGE985 Inductive Limit Switch

- Inductive sensors acc. to DIN19234 or respective NAMUR or in three-wire-technology
- Inductive sensors for security application (self monitoring)
- Mechanical Switches (Micro switches)
- Exact switching point due to adjustable transmission
- Switching points freely definable
- Rugged design. Low vibration effect in all directions
- Mounting on linear actuators according to NAMUR: IEC 534 Part 6
  Stroke range 8 to 100 mm (0.3 to 4 in)
  (larger strokes on request)
- Mounting on rotary actuators according to VDI/VDE 3845 For rotation angles up to 120°
  - Angular range
    linear: 30° to 120°
    equal percentage: 90°; linear from 70°
- Protection class IP54 or IP65
- Explosion protection*:
  - II 2 G EEx i (intrinsic safety) according to ATEX
- Ambient temperature** –40 to 80°C (–40 to 176°F)
- EMV according to international standards and laws (CE)
- SIL3/SIL2 for inductive limit switch (optional)
- Double cable entries (optional)

* not for mechanical switches
** dependent on Ambient Temperature classes

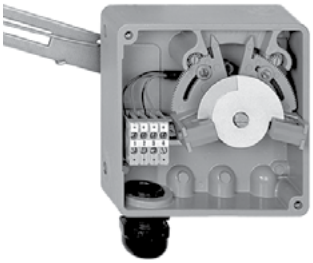

Limit switch SGE985 serves as end position signalling of actuators and can be mounted to stroke actuators as well as to rotary actuators. It is constructed with inductive sensors or micro switches and signalizes exceeding or declining of two adjustable positions.

For complete specification, refer to Product Specification Sheet PSS EVE0201 A-(en).

Input
Stroke
with diaphragm actuators.....up to 100 mm
Rotary angle
with rotary actuators.....up to 120°

Response characteristic
Gain .....continuously adjustable from 1:1 to approx. 7:1
Switching point repeatability ..<0.2%

Electrical connection
Line entry .....1 cable gland M20 x1.5
Cable diameter .....6 to 12 mm (0.24 to 0.47 in)
Screw terminals.....3 terminals for additional
Wire cross section .....0.3 to 2.5mm² (AWG 22-14)

How to Order – Specify model number SGE985

Version
Inductive Limit Switch (Standard Version) ..... -S
Inductive Limit Switch (Security Version) ..... -T
Inductive Limit Switch (Three-Wire Version), Without Explosion Protection(b) ..... -U
Two Micro Switches, Without Explosion Protection(b) ..... -V

Cable Entry
M20 x 1.5 With One Plastic Cable Gland, Color Gray 7

Explosion Protection
II 2 G EEx ia IIC T6 according to ATEX ..... EAA
Without ..... ZZZ

Attachment Kit
Order as Auxiliary ..... N

Options
SIL3 for Inductive Limit switches ..... Q

Tag No. Labeling
Stamped With Weather Resistant Color ..... -G
Stainless Steel Label Fixed With Wire ..... -L

Note
b Only available with ZZZ

Auxiliary – see EVE9902
Fittings – see EOO9001

FRS Filters Regulators

FRS923

FRS02

FRS03

- Minimal effect of upstream pressure fluctuation
- Low inherent air consumption
- Control of instrument supply air pressure, and removal by filtration of dust particles and water content.
- Explosion protection II2 G EEx c (constructive safety)
- Compact attachment
- Stainless steel housing for Offshore and Food & Beverage applications

Pneumatic equipment and instrumentation such as positioners can only fuction efficiently when provided with an air supply which is dust-, oil- and moisture-free. The supply air pressure has also to be maintened within close limits, unaffected by changes in the rate of consumption.

Filters regulators FRS923, FRS02 and FRS03 provide the necessary control to the desired pressure with an additional filtration up to 30µm.

For complete specification, refer to Product Specification Sheet PSS EVE0301 A-(en) and TI EVE0302 A-(en).

FRS923 – FRS02 – FRS03

Input

Max. . . . . .10 bar/1 MPa/150 psig
Air throughput (FRS923). . . .max. 24 Nm3/h
Air throughput (FRS02/03) . .max. 18 Nm3/h
Upstream pressure
dependency . . . . . .<1 mbar/0.1 bar
Max. inherent air
consumption. . . . . .<0.001m3/h
Ambient temperature
range (FRS923). . . . . .–40 to +80°C
Ambient temperature
range (FRS02/03) . . . . . .–20 to +60°C
Pneum. connections . . . . . .internal thread 1⁄4–18 NPT

Materials

Filter . . . . . .Sintered bronze,
diffusion tinned,
filter grade 30 mm
Filter bowl (FRS923). . . . . .Diecast aluminum
Filter bowl (FRS02). . . . . .Diecast aluminum
Filter bowl (FRS03). . . . . .Stainless Steel 316
Gauge for standard
version (FRS923). . . . . .Housing: plastic
Gauge for standard
version (FRS02/03). . . . . .Housing: stainless steel
Measuring system . . . . . .brass
Gauge for version without
nonferrous metal (FRS923). . .1.4571

Attachment Kits

Tube for direct mounting FRS to positioner (1/4 NPT connection)

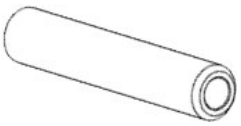

VG-91

Filter regulator bracket in Stainless Steel 316

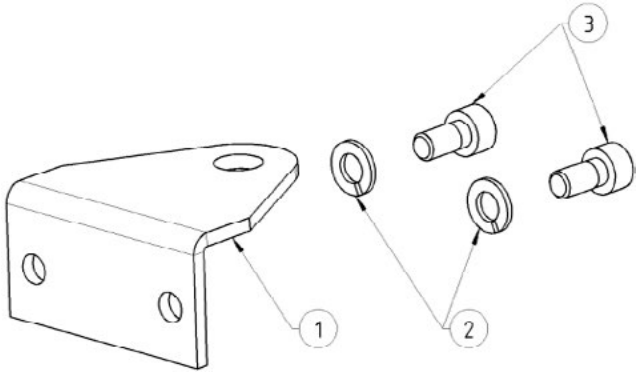

EBZG-FR01

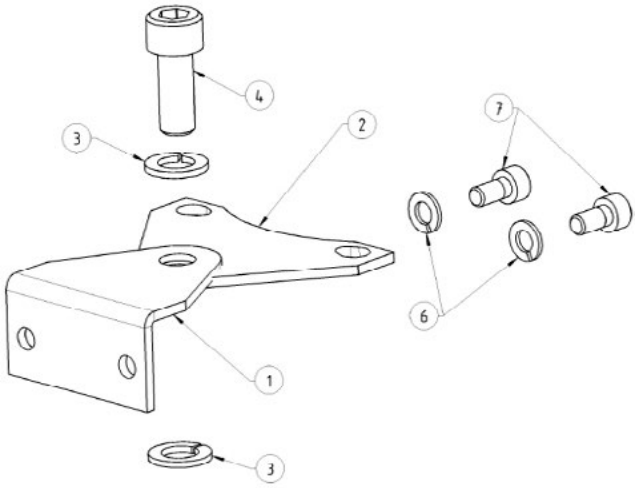

EBZG-FR02

How to Order

Specify model number FRS02 Filter regulator FRS02 . . . . . FRS02

Specify model number FRS03 Stainless Steel filter regulator FRS03

Specify model number FRS923 Filter regulator FRS923 . . . . . FRS923

Control range

0 to 2.5 bar; 0 to 35 psi . . . . . -1
0 to 6 bar; 0 to 90 psi . . . . . -2

Version

Pressure Regulator without Filter . . . . . R
Pressure Regulator with Filter . . . . . S

Gauges

Without[a] . . . . . W
Gauge With Plastic Housing[b, d] . . . . . K
Gauge With Housing in 1.4571[c] V

Optional Features

Indication Range In kg/cm . . . . . -A
Indication Range In kPa . . . . . -B
Version Free Of Non Ferrous Metal . . . . . -C
Protection Class IP65 . . . . . -F
Assembled free of oil and grease / Designed for Auxilliary Energy Oxygen . . . . . -S

Tag No. Labeling

Stamped With Weather Resistant Color . . . . . -G
Stainless Steel Label Fixed With Wire . . . . . -L

Notes

a Not available with Optional Features -A, -B
b Not available with Optional Features -C
c Not available with Optional Features -A
d Not available with Optional Features -B

Fittings – see EOO9001

IP24 IP Transducer for Field Service

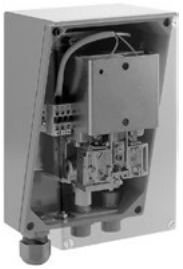

Input

Signal range . . . . . .4 to 20 mA/0 to 20 mA/
0 to 10 mA/0 to 10 V
Input resistance (at 20 °C)
Normal Version and
Version II 2 G EEx ia IIC T6
acc. to ATEX . . . . . .<220 Ohms
Signal Range
0 to 10 mA / 0 to 10 V. . . .<1000 Ohms

Output

Signal range normal . . . . . .0.2 to 1 bar, 3 to 15 psi,
20 to 100 kPa, 0.2 to 4 bar
Signal Range reverse. . . . . .1 to 0.2 bar, 15 to 3 psi,
100 to 20 kPa, 4 to 0.2 bar

Supply air . . . . . .1.4 ±0.1 bar (20 ±1.4 psi)
Air consumption. . . . . .<100 l/h
Supply air. . . . . .free of oil, dust, water
according to ISO 8573-1
Max. particle-size and -density. . Class 2
Max. oil contents . . . . . Class 3

Transmission performance

Non-linearity
(terminal based) . . . . . .<0.3% of final value
Hysteresis . . . . . .<0.1%
Supply pressure dependence <0.25 %/0,1 bar
Temperature influence
Output normal . . . . . .<0.3%/10 K
Output reverse . . . . . .<0.5%/10 K
Sensitivety level . . . . . .<0.02%
Housing
Material . . . . . .Aluminum casting, finished
Protection Class . . . . . .IP54 or IP65

For conversion of a standard electrical signal into a standard pneumatic signal.

For complete specification, refer to Product Specification Sheet PSS EVE0401 A-(en).

- High air capacity
- Low input resistance
- Easy adaptation of the Converter to ranges 0 to 20 mA or 4 to 20 mA
- Easy change of the output signal from bar to psi
- Mode of action normal or reverse
- Protection Class IP54 or IP65
- Version in II 2 G EEx ia IIC T6 acc. to ATEX
- Stainless Steel housing (optional)

How to Order – Specify model number IP24

Input

Signal Range 0 - 20 mA . . . . . -A
Signal Range 4 - 20 mA . . . . . -B
Signal Range 0 - 10 mA[a]. . . . . -C
Signal Range 0 - 10 V[a]. . . . . -D

Output

Signal Range 0. -1 bar. . . . . K
Signal Range 3-15 psi L
Signal Range 20-100 kPa . . . . . M
Signal Range 0.2-4 bar[a] . . . . . N
Signal Range 0.2-5 bar[a] . . . . . P
Signal Range 0.2-6 bar[a] . . . . . Q

Mode of Action

Normal (For Version ZZZ) . . . . . D
Normal (For Version EAA according to ATEX) . . . . . E
Reverse . . . . . R

Electrical Certification

II 2 G EEx ia IIC T6	EAA
Without	ZZZ

Options

Attachment Kit For Pipe Mounting	-A
Protection Class IP65	-B
Calibration In kp/cm	-C
Assembled free of oil and Grease / Designed for Aux. Energy Oxygen	-S

Tag No. Labeling

Stamped With Weather Resistant Color	-G
Stainless Steel Label Fixed With Wire	-L

Note

a Only available with Mode of Action Code D

Accessories for Positioners

Adapter **AD** made of stainless steel, brass zinc plated, or plastic, for connection of different threads.

Cable glands **BUSG** made of stainless steel, brass zinc plated, or plastic guide the electrical connection into the device and guarantee a centered, stress relieved and secure fit of the cable.

Attachment-Kits **EBZG** are customized and include all required parts to mount a positioner onto a specific valve/actuator.

Manifolds **LEXG** allow, depending on the positioner version, different pneumatic connections or the option to include a manifold with gauges.

Booster-Relays deliver a higher air capacity, to reduce the stroke time for very large actuators:

- Direct mounted to the positioner
  LEXG (for SRD960, SRD991, SRI990)
  or **VKXG** (for SRI986 and SRP981)
- Remote mounted acc. to NAMUR
  LEXG (for all Positioners)

Technical Data for AD and BUSG, refer to Product Specification PSS EOO9001 A-(en).

For complete specification of the EBZG, LEXG and VKXG, refer to Product Specification for the individual positioner.

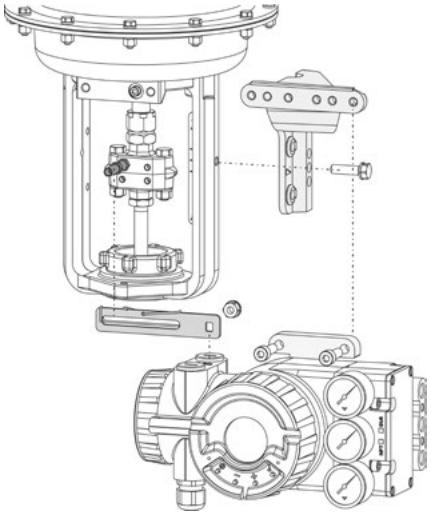

Adapter	**AD**
Adapter ½" NPT to ¾" NPT (stainless steel)	-A3
Adapter M20 x 1.5 to G½" (internal thread) (stainless steel)	-A8
Adapter M20 x 1.5 to ½"-14 NPT (internal thread) (brass with nickel coating)	-A5
Adapter M20 x 1.5 to ½"-14 NPT (internal thread) (stainless steel)	-A6
Adapter (plastic) M20 x 1.5 to PG13.5 (internal thread)	-A9
Cable glands and plugs	**BUSG**
M20 x 1.5 plastics, color blue	-K7
M20 x 1.5 plastics, color white	-K9
M20 x 1.5 stainless steel	-S6
M20 x 1.5 plastics, color gray	-K6
M20 x 1.5 HF-cable gland for Fieldbus	-P4
M20 x 1.5 Plug-connector for Fieldbus (ss/threaded connection ⅞-UN)	-F2
M20 x 1.5 Plug-connector for Fieldbus (ss/threaded connection M12)	-P3
M20 x 1.5 stainless steel EEx d	-S7
M20 x 1.5 brass zink plated EEx d	-S8
½-14 NPT cable gland 6…12 mm, Stainless steel, EEx d	-N1
½-14 NPT cable gland 6…12 mm, Steel zink plated, EEx d	-N2
½-14 NPT, brass zink plated, EEx d	-N3
M20 x 1.5 plug, plastic	-V3
M20 x 1.5 plug, Stailess steel, EEx d	-V4
½-14 NPT plug,Stainless Steel, EEx d	-V5
M20 x 1.5 plug, brass zink plated, EEx d	-V6
½-14 NPT plug, brass zink plated, EEx d	-V7

Attachment Kit	**EBZG**
For diaphragm actuators with casting yoke acc. NAMUR. (incl. standard Couple Lever) (for SRP981, SRI983, SMP981, SMI983, SGE985)	-GN
For diaphragm actuators with casting yoke acc. NAMUR. (incl. standard Couple lever) (for SRI986)	-HN
For diaphragm actuators with pillar yoke acc. NAMUR. (incl. standard Couple lever) (for SRP981, SRI983, SMP981, SMI983, SGE985)	-FN
For diaphragm actuators with pillar yoke acc. NAMUR (incl. standard Couple lever) (for SRI986)	-KN
For rotary actuators, without flange, 3 drill holes 6.5 mm (for SRP981, SRI983, SRI986, SMP981, SMI983, SGE985)	-PN
For rotary actuators, without flange, 4 threads M6 (e.g for Petras actuators) (for SRP981, SRI983, SRI986, SMP981, SMI983, SGE985)	-NN
For rotary actuators, with flange (for SRP981, SRI983, SRI986, SMP981, SMI983, SGE985)	-JN
For rotary actuators acc. to VDI/VDE 3845, with shaft (for SRP981, SRI983, SRI986, SMP981, SMI983, SGE985)	-ZN
For Masoneilan type Camflex II (for SRP981, SRI983, SRI986, SMP981, SMI983, SGE985)	-RN
For Masoneilan type Sigma F (for SRI986, SRP981, SRI983)	-SN
For Masoneilan type 37/38, Fisher Elliott type 656, 667 (for SRP981, SRI983, SGE985, SMI983, SMP981)	-TN
For Guide type P (for SRP981, SRI983)	-UN
For Masoneilan type 87/88 (for SRI986)	-DN
For Masoneilan type 87/88 (for SRP981, SRI983, SMP981, SMI983, SGE985)	-EN
For Masoneilan VariPak (for SRI986)	-LN
For Masoneilan VariPak (for SRP981, SRI983, SGE985, SMI983, SMP981)	-MN
For Masoneilan type 37/38, Fisher Elliott type 656, 667, (SRI986)	-QN
For IAL actuators (for SRP981, SRI983, SGE985, SMI983, SMP981)	-VN
For IAL actuators (for SRI986)	WN
For Velan - Sart von Rohr[g]	-XN
Brackets VDI/VDE 3845 (A = 130 mm/5.12 in; B = 50 mm/1.97 in) (for SRP981, SRI983, SRI986, SGE985, SMI983, SMP981)	-C3
Brackets VDI/VDE 3845 (A = 80 mm/3.15 in; B = 30 mm/1.18 in) (for SRP981, SRI983, SRI986, SGE985, SMI983, SMP981)	-C2
Brackets VDI/VDE 3845 (A = 80 mm/3.15 in; B = 20 mm/0.79 in) (for SRP981, SRI983, SRI986, SGE985, SMI983, SMP981)	-C1
Couple Lever/Cam	**EBZG**
Standard (a = 72 mm) (for SRP981, SRI983, SRI986, SMP981, SMI983, SGE985)	-AN
Extended (a = 91 mm) (for SRP981, SRI983, SRI986, SMP981, SMI983, SGE985)	-BN
Inverse equal percentage cam for rotary actuators (for SRP981, SRI983, SRI986)	-CN
Spring Set	**FESG**
Range-Springs (4 pc.) (for SRP981, SRI983, SRI986)	-FN
Manifold (Connection ¼-18 NPT)	**LEXG**
Staggered connections (for SRP981, SRI986)	-BN
Connections same level (for SRP981, SRI986)	-CN
Staggered connections for ¼"-thread pneum. tube-connections (e.g. tube-diameter: 8 mm / 0.3 in) (for SRP981, SRI986)	-DN
With gauges for supply air, y, for version single acting (for SRP981, SRI986)	-JN
With gauges for supply air, w, for version single acting (for SRP981)	-KN
With gauges for supply air, w, y, for version single acting (for SRP981)	-LN
With gauges for supply air, y1, y2, for version double acting (for SRP981, SRI986)	-MN
With gauges for w, y1, y2, for version double acting (for SRP981)	-NN
Gauge manifold without gauge (for SRP981, SRI986)	-RN
Gauge manifold without gauge, for supply air, y1, y2, for version double acting (for SRP981, SRI986)	-SN
Gauge manifold without gauge, for w, y1, y2, for version double acting (for SRP981)[f]	-TN
Booster (Connection ¼-18 NPT)	**VKXG**
For version single acting (for SRP981, SRI986)	-FN
For version double acting (for SRP981, SRI986)	-GN
For version single acting with doubled output capacity (for SRP981, SRI986)	-HN

ACCESSORIES FOR POSITIONER (SRD991, SRD992, SRI990, SRD960)

Filter Regulator

Filter Regulator FRS923-2SK for -40°C to +80°C	.FRS01
Filter Regulator for -20°C to +70°C	.FRS02
Nipple for direct mounting Filter regulator 1/4 NPT both sides	.VG-91

Communication/Modem/DTM

HART USB Modem (made by Itak) with ATEX IS Certification	.MOD900
DTM for SRD Serie for HART / FF / Profibus	VALCARE
ATEX IS Barrier Rail Mounted Module, 1 Channel, ATEX EEx ia IIC / FM Intrinsically Safe (TV228-SEGX)	.TV228

Attachment Kits	**EBZG**
For Diaphragm Actuators With Casting Yoke Acc. NAMUR (Includes Standard Couple Lever)	-H
For Diaphragm Actuators With Pillar Yoke Acc. NAMUR (Includes Standard Couple Lever)	-K
For Mounting To Rotary Actuators Acc. VDI/VDE 3845 (Without Bracket)	-R
For FoxTop/FoxPak	-E
For FoxTop/FoxPak	-E1
For Armstrong/Python/Dembia Series sizes 1" to 3"	-AM1
For Badger Meter – Research Control Series 754 And 755 Size ½-Inch	-B1
Attach Kit-Brackets VDI/VDE 3845 (A=80mm/3.15in Attachment Kit – Brackets VDI/VDE 3845 (A=80 mm/3.15 in; B=20 mm/0.79 in)	-C1
Attach Kit-Brackets VDI/VDE 3845 (A=80mm/3.15in Attachment Kit – Brackets VDI/VDE 3845 (A=80 mm/3.15 in; B=30 mm/1.18 in)	-C2
Attach Kit-Brackets VDI/VDE 3845 (A=130 mm/5.12 in Attachment Kit – Brackets VDI/VDE 3845 (A=130 mm/5.12 in; B=50 mm/1.97 in)	-C3
Attach Kit-Brackets VDI/VDE 3845 (A=130 mm/5.12 in Attachment Kit – Brackets VDI/VDE 3845 (A=130 mm/5.12 in; B=30 mm/1.18 in)	-C4
For Direct Mounting (Includes Standard Couple Lever)	-D
For Fisher 657, 667 (Linear) size 30 And 40	-F1
For Fisher 1051, 1052, 1061 size 40	-F2
For Fisher 657, 667 size 40 and 60	-F3
For Fisher 657, 667 size 70 and 100	-F4
For Fisher 1051, 1052, 1061 size 33	-F5
For Fisher 1051, 1052, 1061 size 60	-F6
For Fisher Baumann 9000	-F7
For Fisher Baumann 48000	-F8
For Fisher 20 DN15	-G1
For Foxboro P-Series such as EBZG-H With Installed Height 80 mm/3.15 in.	-H1
NAMUR – Attachment Kit for Centered Mounting Position On The Casting Yoke	-H2
For Mounting On ADAR Control Valve	-H3
For Mounting On ADAR Micro Flow Control Valve	-H4
For casting yoke 100mm wide max without fixing hole	-H5
For Diaphragm Actuators With Casting or Pillar Yoke Acc. NAMUR (Includes Standard Couple Lever)	-H6
For old Biffi rotary actuator	-J
For "old" Jamesbury QuadraPower	-J1
For "old" actuator Jamesbury RP/SR Series	-J2
For Diaphragm Actuators With Pillar Yoke Acc. NAMUR (Incl. Standard Couple Lever) such as EBZG-K With Installed 80 mm/3.15 in.	-K1
For Kinetrol (Actuator Size 05)	-K2
For Kinetrol (Actuator Size 07)	-K3
For Kinetrol (Actuator Size 09)	-K4
For Diaphragm Actuators With Pillar Yoke Pillar Diameter From 40 mm Up To 50 mm (Incl. Standard Couple Lever)	-K5
For Metso/Neles Rotary Actuators Type AB6 And Type BJ & BC Size 8 And 10, B1C11	-L1
For Metso/Neles Rotary Actuators Type BJ & BC Size 12 And 16, B1C17	-L2
For Metso/Neles Rotary Actuators Type BJ & BC Size 32[(h)]	-L3
For Metso/Neles Rotary Actuators Type EC / EJ Series	-L4
For Metso/Neles Rotary Actuators Type B1CU C/20	-L5
For Metso/Neles Rotary Actuators Type BJ and BC size 8 to 20	-L6

For Metso/Neles Rotary Actuators Type BJ and BC size 25 to 50 . . . -L7
For Masoneilan Type Camflex II . . . -M
For Masoneilan 47/48 (Sigma-F) . . . -M1
For Masoneilan Type 37/38 Size 15 And 18 (Complete Kit) . . . -M2
For Masoneilan Type 37/38 (As EBZG-M2, but only with Feedback Lever and Attachment Plate and without Connections Between Stem and Lever) . . . -M3
For Masoneilan Type 87/88 All Size . . . -M4
For Masoneilan Varipac . . . -M5
For Masoneilan 37/38 Size 9, 11, 13 . . . -M6
For Masoneilan / Severn Glocon Type Domotor Size A[c] . . . -M7
Masoneilan Camflex I . . . -M8
For Masoneilan Minitork I . . . -M9
For Linear Actuators According To VDI/VDE3847 Without Gauges, With Feedback Lever . . . -N1
For Linear Actuators According To VDI/VDE3847 Prepared For Gauges, With Feedback Lever[b] . . . -N2
For Linear Actuators According To VDI/VDE3847 With Gauges (Supply/Y1), With Feedback Lever[b] . . . -N3
For Linear Actuators According To VDI/VDE3847 With Gauges (Supply/Y1/Y2), With Feedback Lever . . . -N4
For Rotary Actuators According To VDI/VDE3847 Without Gauges, With Rotary Coupling . . . -N5
For Rotary Actuators According To VDI/VDE3847 Prepared For Gauges, With Rotary Coupling[b] . . . -N6
For Rotary Actuators According To VDI/VDE3847 With Gauges (Supply/Y1), With Rotary Coupling[b] . . . -N7
For Rotary Actuators According To VDI/VDE3847 With Gauges (Supply/Y1/Y2), With Rotary Coupling[b] . . . -N8
For NAF Turnex Rotary Actuators for All Sizes . . . -N9
For ARI-Armatuern – Direct Mounting To Actuator Type DR . . . -P1
For ARCA – Direct Mounting To Actuator Type BR 812 . . . -P2
For Polna / P+W BR33 Series . . . -P3
For mounting – retrofit onto ABB cylinder (replacement of existing ABB positioner) . . . -P4
For ABB Kent Introll model DSCV-G111/D28R . . . -Q1
For ABB Kent Introll model DSCV-G111/D16R . . . -Q2
For Mounting To Rotary Actuators Acc. VDI/VDE 3845 (Heavy Duty) . . . -R2
For Samson Type 3277 With ¼-18 NPT . . . -S1
For Sereg NX Size 2 (Flowserve) . . . -S10
For Sereg NX Size 3 (Flowserve) . . . -S11
For Samson Micro Flow Type 3277-5 New Type . . . -S13
For Sereg NL4 . . . -S14
For Schlumberger Linear Front mounting . . . -S15
For Schlumberger Linear Side mounting . . . -S16
For Samson Type 3277 With G 1/4 . . . -S2
For Siemens Actuators V-Series . . . -S3
For Sereg Maxflow, Revca, Reglob New Type . . . -S4
For Supply And Output Pressure . . . -S5
For Supply And Output Pressure . . . -S6
For Sereg Maxflo "Old Type" . . . -S7
For Samson Micro Flow Type 3277-5 Old Type . . . -S8
For Sereg NX Size 1 (Flowserve) . . . -S9
For Tuflin/XOMOX Type MX60 . . . -T1
For Tuflin/XOMOX Type MX200 . . . -T2
For Tuflin/XOMOX Type MX450 / Type MX750 / Type MX1250 . . . -T3
For Tuflin/XOMOX Type MX3000 . . . -T4
For Uhde projekt stroke 400 mm . . . -U1
For Valtek Linear Actuator All Sizes – Stroke Up To 4 inch/102 mm . . . -V1
For VETEC Type R150 . . . -V2
For Valtek Linear Actuator Size 200 And 300 – Stroke Approximately 6 And 8 inch/152 and 203 mm . . . -V4
For Valtek Linear Actuator Size 200 – Stroke Approximately 12 Inch/305 mm . . . -V5
For Mounting To Rotary Actuators With Squared Coupling 14 mm/0.55 inch, e.g. for Worcester Series 39 . . . -W1
For Mounting To Rotary Actuators With Squared Coupling 16 mm/0.63 inch . . . -W2
For Hagan Actuators (Right of Pneumatic Cylinder) . . . -X1
For Hagan Actuators (Left of Pneumatic Cylinder) . . . -X2
For AMRI Rotary Actuator (Requires Minor Modification Of Actuator) (d) . . . -X3

Couple Lever

Standard Couple Lever (Stroke 8 to 70 mm)	-A
Extended Couple Lever, Max 260 mm Extended Couple Lever; Stroke Maximum 260 mm	-A1
Extra Short Stroke Couple Lever (Stroke 5 to 15 mm)	-A2
Fold Feedback Couple Lever (Stroke 8 to 70 mm)	-A3
Short Stroke Couple Lever (Stroke 8 to 35 mm)	-A4
Extended Couple Lever; Stroke Maximum 120 mm	-B

Carrier Bolts	**SRXG**
Carrier Bolt Extra Short 23 mm	-A
Carrier Bolt 38 mm	-B
Adjustable Carrier Bolt 20 to 37 mm	-C
Carrier Bolt 47 mm	-D
Carrier Bolt 57 mm	-E
Carrier Bolt 65 mm	-F
Adjustable Carrier Bolt with Fixing System for Stem Diameter up to 21 mm	-G
Adjustable Carrier Bolt with Fixing System centered for Stem Diameter up to 21 mm	-G1
Adjustable Carrier Bolt with Fixing System centered with extension up to 80 mm for Stem Diameter up to 21 mm	-G2
Adjustable Carrier Bolt with Fixing System for Stem Diameter up to 34 mm	-H
Carrier Bolt 80 mm	-I
Adjustable Carrier Bolt for thread ⅜"	-J
Adjustable Carrier Bolt for thread 5/16"	-K
Extension for Carrier Bolt	-L
Adjustable Carrier Bolt with Fixing System centered for Stem Diameter up to 64 mm	-M

Manifold	**LEXG**
Manifold – staggered connections in ¼" for pneumatic tube-connections (e.g. diameter: 8 mm/0.3 in)	-D
Manifold – staggered connections for connection G ¼ NPT (e.g. diameter: 8 mm/0.3 in)	-D1
Manifold w/connection G ¼	-K
Manifold w/connection ¼-18 NPT	-L

Gauges Manifold

Manifold w/gauges with connection ¼-18 NPT	-J
Manifold w/gauges with connection G ¼	-J1
Manifold w/gauges with connection ¼-18 NPT	-M
Manifold w/gauges with connection G ¼	-M1
Manifold w/gauges for SRI990 and SRD991 ECEP EP0200/NAFLinkIT with connection ¼-18 NPT	-M2
Manifold w/o gauges with connection ¼-18 NPT	-N
Manifold w/o gauges with connection G ¼	-N1

Booster Relay

Booster Relay w/connection ¼-18 NPT	-F
Booster Relay w/connection G ¼	-F1
Booster Relay w/connection ¼-18 NPT. Approved for SIL3 application	-FQ
Booster Relay w/connection G ¼. Approved for SIL3 application	-FQ1
Booster Relay w/connection ¼-18 NPT	-G
Booster Relay w/connection G ¼	-G1
Booster Relay w/connection 1/2-18 NPT with double output capacity	-H
Booster Relay w/connection G ½ with doubled output capacity	-H1
Booster Relay w/connection ½-18 NPT with double output capacity. Approved for SIL3 application	-HQ
Booster Relay w/connection G ½ with doubled output capacity. Approved for SIL3 application	-HQ1
Booster Relay Type EIL-100 ¼ NPT made by SMC (one piece for single acting)	-W11
Booster Relay Type EIL-100 ¼ NPT made by SMC (two pieces for double acting)	-W12
Booster Relay Type XB100 ¼ NPT made by HIC (one piece for single acting) (e)	-W21
Booster Relay Type XB-100 ¼ NPT made by HIC (two pieces for double acting) (c)	-W22
Booster Relay w/connection G ¼ (for NAMUR mounting)	-X1
Booster Relay w/connection G ¼ (for NAMUR mounting)	-Y1
Booster Relay w/connection G ½ with doubled output capacity (for NAMUR mounting)	-Z1

Surge/Lightning Protection				
Surge/Lightning Protection for 4-20 mA with or without HART type TP48-N-NDI	-L1			
Surge/Lightning Protection for FF/Profibus type TP32-N-NDI	-L4			
Cable Gland				
Cable Gland, M20x1.5 Plug-Connector For Fieldbus (ss/Threaded Connection 7/8 – UN)		-F2		
Cable Gland, M20x1.5 Plastics, Color Gray/Black		-K6		
Cable Gland, M20x1.5 Plastics, Color Blue		-K7		
Cable Gland, M20x1.5 Plastics, Color White		-K9		
Cable Gland, M20x1.5 Plug-Connector For Fieldbus (ss/Threaded Connection M12)		-P3		
Cable Gland, M20x1.5 HF For Fieldbus		-P4		
Cable Gland, M20x1.5 Stainless Steel		-S6		
Tube Fitting				
Tube Fittings, G ¼A, 6x1mm, 1 pc.			VG-01	
Tube Fittings, G ¼A, 6x1mm, 2 pc.			VG-02	
Tube Fittings, G 1/4A, 6x1mm, 3 pc.			VG-03	
Tube Fittings, ¼ NPT, 6x1mm, 2 pc.			VG-52	
Tube Fittings, ¼ NPT, 6x1mm, 3 pc.			VG-53	
Adapter				
Adapter (Brass With Nickel Coating) M20 x 1.5 To ½-14 NPT (Internal Thread)				AD-A5
Adapter (ss) M20 x 1.5 To ½-14 NPT (Internal Thread)				AD-A6
Adapter (ss) M20 x 1.5 To G ½" (Internal Thread)				AD-A8
Adapter (Plastic) M20 x 1.5 To PG13.5 (Internal Thread)				AD-A9
Lock-In Relays				**LEXG**
Lock-In Relay for loss of air supply for single acting/NAMUR mounting				-VR1
Lock-In Relay (Fall Freeze) for loss of air supply and electric power for single and double acting/SRI990 direct mounting				-VR6

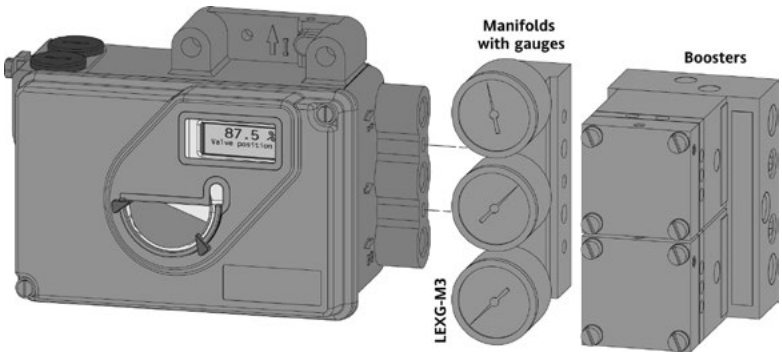

LEXG-M3: Sandwich Manifold with gauges, to be mounted together with Booster LEXG-Fx or Gx

Notes

a After 1, July 2003 in the region of validity for ATEX this version with Electrical Classification according to CENELE
b Not released
c Not released
d Please consult Eckardt production before ordering
e Not released
f Only available with Version -C
g Only available for SRI986

* We recommend to contact our field service before selection of these mounting kits.
Further Attachment kits on request.
See also http://www.foxboro-eckardt.com/pdf/TI_FoxEck/Attachment-kits.pdf.

The following chapter contains reduced Product Specifications of the instruments:

244LD	LevelStar Buoyancy Transmitter with Torque Tube for Liquid Level, Interface and Density
244LVP	LevelStar Buoyancy Transmitter for Liquid Level, Interface and Density
167LP	Pneumatic Buoyancy Transmitter with Torque Tube for Liquid Level, Interface and Density
204xx	Accessories for Buoyancy Transmitters

For detailed technical specifications visit our homepage www.foxboro-eckardt.com or ask your local distributor for the requested Product Specifications PSS.

244LD LevelStar Buoyancy Transmitter with Torque Tube for Liquid Level, Interface and Density

- Communication HART, PROFIBUS PA or FOUNDATION Fieldbus
- Configuration via FDT-DTM
- Conventional operation with local keys
- Easy adaptation to the measuring point without calibration at the workshop
- Backdocumentation of measuring point
- Continuous self-diagnostics
- Configurable safety value
- Software lock for local keys and reconfiguration
- Approved for SIL applications
- Simulation of analog output for loop-check
- Local full graphic display in %, mA or physical units
- Signal noise suppression by Smart Smoothing
- Linear or customized characteristic
- Process temperature from –196°C to +500°C
- Materials for use with aggressive media
- Micro sintermetal sensor technology
- Separate mounting of sensor and amplifier with remote amplifier mounting kit

The buoyancy transmitter 244LD LevelStar is designed to perform continuous measurements for liquid level, interface or density of liquids in the process of all industrial applications. The measurement is based on the proven Archimedes buoyancy principle and thus extremely robust and durable. Measuring values can be transferred analog and digital. Digital communication facilitates complete operation and configuration via PC or control system. Despite extreme temperatures, high process pressure and corrosive liquids, the 244LD LevelStar measures with consistent reliability and high precision. For installations in contact with explosive atmospheres up to Zone 0, certificates are available.

For complete specifications, refer to Product Specification Sheet PSS EML 0710 G-(en).

Input

Measuring span. . . . . .2 to 20 N contin. adjustable
Measuring ranges. . . . . .50 mm to 50 m
Density range . . . . . .100 <ρ <2000 kg/m^3
Displacer 204DE
Standard length . . . . . .350 to 3000 mm (14 to120 inch)
Weight of displacer . . . . . .max. 25 N
Characteristic . . . . . .linear oder customized with up to 32 setpoints

Output

HART, 4 to 20 mA

Lower range value . . . . . .continuously adjustable within the measuring limits
Turn-down . . . . . .1:1 to 1:20
Signal range. . . . . .4 to 20 mA/20 to 4 mA
Operating range. . . . . .3.8 to 20.5 mA
Admissible load . . . . . .$R^{L\ max.} = \frac{U_S - 12V}{0.023\ A}$
(U_S = supply voltage)
Accuracy. . . . . .± 0.2 %
Transfer function. . . . . .linear

Communication HART

Connection . . . . . .Two-wire system
Supply voltage U_S. . . . . .>12 V + Rb*0.025 A, < 42 V (< 30V with ex.proof device)
Current sink . . . . . .max. 23 mA
Signal range. . . . . .4 to 20 mA
Operating range. . . . . .3.8 to 20.5 mA (acc. NE43)
Digital communication. . . .HART Protocol, 1200 Baud

Communication PROFIBUS PA/F.Fieldbus

Connection . . . . . .twisted and shielded two wire cable acc.to recommendation based on IEC 1158-2
Supply voltage U_S. . . . . .9 to 32 V dc, V_{SS}≤1%
Operating current. . . . . .10.5 mA ±0.5 mA (base current)
Digital communication. . . .PROFIBUS PA protocol, acc. to class B profile, EN 50170 and DIN 19245 part 4
Signal amplitude. . . . . .±8 mA
Fault current . . . . . .<13 mA
Operating values . . . . . .according to IEC 1158-2
Bus connection . . . . . .Fieldbus interface based on IEC 1158-2

Operating conditions

Process temperature . . . . .–196°C to +500°C
Pressure rating
acc. DIN . . . . . .PN 16, 40, 63, 100, 160, 250
acc. ANSI . . . . . .Class 150, 300, 600, 900, 1500
with heating jacket. . . . .wafer body, max. PN 250/ Class 1500; heating jacket PN 40 / Class 300, heating with saturated steam or thermal oils
Ambient temperature . . . –40°C to +70°C
Relative humidity . . . . . .up to 100%
Condensation . . . . . .permitted
Transportation
storage temperature . . .–40°C to +85°C
Protection class. . . . . .IP 66 (acc. DIN 40 050)

How to Order – Specify model number 244LD LevelStar

Wafer Body Material (Process Wetted)

Carbon Steel 1.0460 (~A 105), application from -10°C to +350°C	-K
1.4404 equivalent to 316L / 1.4435, application from -60°C to +400°C (material is 1.4435 when Wafer Body Pressure Rating codes H1 and H2 selected)	-S
1.4404 equivalent to 316L / 1.4435, application from -196°C to +400°C (material is 1.4435 when Wafer Body Pressure Rating codes H1 and H2 selected)	-U
1.4404 equivalent to 316L / 1.4435, application from -60°C to +500°C (material is 1.4435 when Wafer Body Pressure Rating codes H1 and H2 selected)	-T
Duplex – 1.4462, application from -10°C to +280°C (no PED Certification)	-N
Inconel 625 – 2.4856, application from -10°C to +450°C (no PED Certification)	
Inconel 825 – 2.4858, application from -10°C to +450°C (no PED Certification)[p]	-I
Hastelloy C – 2.4811, application from -196°C to +400°C	-C

Torque Tube Material (Process Wetted)

1.4404 equivalent to 316L	S
Hastelloy C	C
Inconel 600 – 2.4816	I
Monel K500 – 2.4375	M

Wafer Body Flange Size

DN70 (available with Wafer Body Material S, U, T, and Torque Tube Material S and C)	0
DN80	1
DN100	2
3-Inch	3
4-Inch	4

Wafer Body Pressure Rating & Contact Face

PN40 (PN16 to PN40) B1/B1 (Contact Face DIN EN 1092-1)[a]	B1
PN250 (PN16 to PN250) B2/B2 (Contact Face DIN EN 1092-1) (Draft DIN EN 1092 1:2005 04)[a]	B2
PN250 (PN16 to PN250) D/C (Contact Face DIN EN 1092-1) (Draft DIN EN 1092 1:2005 04)[a][r]	DC
PN250 (PN16 to PN250) D/D (Contact Face DIN EN 1092-1) (Draft DIN EN 1092 1:2005 04)[a]	DD
PN250 (PN16 to PN250) F/F (Contact Face DIN EN 1092-1) (Draft DIN EN 1092 1:2005 04)[a]	FF
PN250 (PN16 to PN250) F/E (Contact Face DIN EN 1092-1) (Draft DIN EN 1092 1:2005 04)[a][s]	FE

Wafer Body Pressure Rating & Contact Face (continued)

PN250 (PN16 to PN250) L/L (Contact Face DIN 2696)[a]	L1
PN400 L/L Lense (Contact Face DIN 2696)[k][n]	H1
PN500 L/L Lense (IG-Norm High Pressure Version)[i][n]	H2
ANSI Class 150 RF/RF[b]	R1
ANSI Class 900 (300/600/900) RF/RF[b]	R2
ANSI Class 1500 RF/RF[b]	R3
ANSI Class 150 SF/SF[b]	S1
ANSI Class 900 (300/600/900) SF/SF[b]	S2
ANSI Class 1500 SF/SF[b]	S3
ANSI Class 150 RJF/RJF[b]	J1
ANSI Class 900 (300/600/900) RJF/RJF[b]	J2
ANSI Class 1500 RJF/RJF[b]	J3
ANSI Class 300 to 1500, Form LF/LM[b]	LM
ANSI Class 300 to 1500, Form LF/LF[b]	LF
ANSI Class 300 to 1500, Form LG/LT[b]	LT
ANSI Class 300 to 1500, Form LG/LG[b]	LG
ANSI Class 150, Form SG/ST[b]	GT
ANSI Class 300 to 1500, Form SG/ST[b]	ST
ANSI Class 150, Form SG/SG[b]	GG
ANSI Class 300 to 1500, Form SG/SG[b]	SG

Wafer Body Mounting Direction (Amplifier to body)

Right Hand mounted	R
Right Hand mounted w/heating jacket – connecting flanges B1 / DN15, PN40 (DIN EN 1092-1)[m][o]	A
Right Hand mounted w/heating jacket – connecting flanges B1 / DN25, PN40 (DIN EN 1092-1)[m][o]	B
Right Hand mounted w/heating jacket – connecting flanges B2 / DN15, PN40 (DIN EN 1092-1)[m][o]	C
Right Hand mounted w/heating jacket – connecting flanges B2 / DN25, PN40 (DIN EN 1092-1)[m][o]	D
Right Hand mounted w/heating jacket – connecting flanges RF/SF, 1/2 in, Class 300[m][o]	E
Right Hand mounted w/heating jacket – connecting flanges RF/SF, 1 in, Class 300[m][o]	F
Right Hand mounted w/heating jacket – connecting flanges RJF, 1/2 in, Class 300[m][o]	G
Right Hand mounted w/heating jacket – connecting flanges RJF, 1 in, Class 300[m][o]	H
Left Hand mounted	L
Left Hand mounted w/heating jacket – connecting flanges B1 / DN15, PN40 (DIN EN 1092-1)[m][o]	M
Left Hand mounted w/heating jacket – connecting flanges B1 / DN25, PN40 (DIN EN 1092-1)[m][o]	N
Left Hand mounted w/heating jacket – connecting flanges B2 / DN15, PN40 (DIN EN 1092-1)[m][o]	O
Left Hand mounted w/heating jacket – connecting flanges B2 / DN25, PN40 (DIN EN 1092-1)[m][o]	P
Left Hand mounted w/heating jacket – connecting flanges RF/SF, 1/2 in, Class 300[m][o]	S
Left Hand mounted w/heating jacket – connecting flanges RF/SF, 1 in, Class 300[m][o]	T
Left Hand mounted w/heating jacket - connecting flanges RJF, 1/2 in, Class 300[m][o]	U
Left Hand mounted w/heating jacket - connecting flanges RJF, 1 in, Class 300[m][o]	V

Version

Base VERSION – TRANSSTAR (244LD)	B
Base VERSION – LEVELSTAR (244LD)[c][q]	N
Base (B) + Displacer (244LD + 204DE)	S
Base (N) + Displacer (244LD + 204DE)[c][q]	T
Base (B) + Displacer + Displacer Camber + Flange combination + Flange (244LD + 204DE + 204DC + 204FK + 204BCF)[h]	C
Base (N) + Displacer + Displacer Camber + Flange combination + Flange (244LD + 204DE + 204DC + 204FK + 204BCF)[c][q]	D

Cable Entry

M20x1.5 without cable gland	M
1/2-14 NPT without cable gland	N

Communication

HART	H
PROFIBUS-PA	P
FOUNDATION Fieldbus H1	B

8

Electrical Classification

ATEX intrinsic safe, Zone 0, IIC T4 (HART)[d]	0C4
ATEX Intrinsic safe, Zone 0, IIC T6 (HART) Zone 0, IIC T6 (PROFIBUS or FOUNDATION Fieldbus)[d]	0C6
ATEX intrinsic safe, Zone 1, IIC T4 (HART)	1C4
ATEX intrinsic safe, Zone 1, IIC T6 (HART)	1C6
ATEX intrinsic safe, Zone 2, IIC T4 (HART)	2C4
ATEX intrinsic safe, Zone 2, IIC T6 (PROFIBUS or FOUNDATION Fieldbus)	2C6
ATEX explosionproof, Zone 0, IIC T6[d]	D0C
ATEX explosionproof, Zone 1, IIC T6	D1C
FM Nonincendive, HART PROFIBUS or FOUNDATION Fieldbus[c]	NFM
FM Explosionproof	FDZ
CSA Explosionproof	CDZ
FM Intrinsically Safe, HART PROFIBUS or FOUNDATION Fieldbus[c]	FAA
CSA Intrinsically Safe[c]	CAA
GOST-R intrinsically safe, T4 (HART)[u]	GA4
GOST-R intrinsically safe, T6[u]	GA6
GOST-R explosion proof, Zone 1 – IIC T6[u]	GDZ
GOST-R intrinsically Safe, Zone 0 – IIC T6 (HART)[x]	GA0
GOST-R intrinsically Safe, Zone 1 – IIC T6 (HART)[x]	GA1
GOST-R intrinsically Safe, Zone 2 – IIC T6 (HART)[x]	GA2
GOST-R explosion proof, Zone 0 – IIC T6[x]	GD0
GOST-R explosion proof, Zone 1 – IIC T6[x]	GD1
NEPSI Intrinsically Safe, T4 (HART)	NA4
NEPSI Intrinsically Safe, T6	NA6
NEPSI Explosionproof, Ex d IIC T4-T6	NDZ
For General Purpose Areas, Not Explosionproof	ZZZ

Overview Accessories

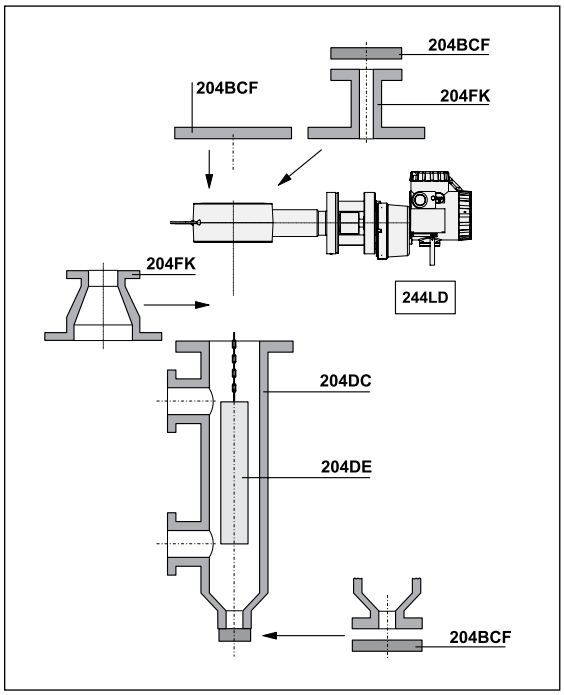

For Displacer Element 204DE, Displacer Chamber 204DC, Flange combination 204FK, Flange Kit 204BCF see 204xx or Product Specifications PSS EML0901 A-(en), 204. Accessories for Buoyancy Transmitter.

Optional Features

Housing Complete Stainless Steel without external Pushbuttons (not available with Wafer Body Material codes K)	-H
Remote Amplifier Mounting Kit (3m), Mounted[e]	-R
Remote Amplifier Mounting Kit (10m), Mounted[e]	-B
Tag No. Labeling	
Stainless Steel Label Fixed With Wire	-L
Stainless Steel Label Fixed On Amplifier	-F
National Certificates	
TA-Luft	-K
ABSA (Canada)	-A
Germanischer Lloyd[q]	-G
Certificates	
EN 10204-2.1, Certificate Of Compliance	-1
EN 10204-2.2 , Specific Test Report (Calibration)	-2
EN 10204-3.1 , Inspection Certificate Of Process Wetted Material	-3
PED 97/23/EC additional unit verification, according to module F/G (Not available with Wafer Body Material codes N and I)	-4
Comply With NACE Standard MR-0175 (available with Torque Tube Material I, M or C)[g] with Wafer Body Material codes S, U, T, N, I, C with Wafer Body Material codes K, L, O, P	-6
SIL 2 Certificate[q]	-Q
Material Test	
X-Ray And Isotope Test For Weldings	-7
Dye Penetration Test	-8
PMI - Test	-5
Subassemblies	
Torque Tube for selected code (244LD-*********-W)	-W
Amplifier for selected code (244LD-*********-X)	-X
Complete Sensor for selected code (244LD-*********-Y)	-Y
Wafer body for selected code (244LD-*********-Z)	-Z

Notes

a Available with Wafer Body Flange Size 1 or 2
b Available with Wafer Body Flange Size 3 or 4
c Pending
d Not available with Wafer Body Pressure Rating & Contact Face codes L1, J1, J2, J3, H1, H2, DD
e Not available with Electrical Classification FDZ, CDZ, 0C6, D0C, D1C, GDZ, NDZ or Optional Features -H
g Restrictions concerning the limit of application for the used materials are to considering (NACE Standard MR-0175/2003, bzw. ISO 15156-3)
h Pending, order separately at this time.
i Available with Wafer Body Flange Size 0
k Available with Wafer Body Flange Size 1
m Not available with Wafer Body Flange Size code 4 with Wafer Body Pressure Rating code J3
n Not availabel with Wafer Body Material codes K, L, O, P, N, I, C or Torque Tube Material codes I and M
o Not available with Wafer Body Material codes K, L, O, P, U, N, I, C
p on request
q Available with HART
r D at top
s F at top
u Not applicable with Version N, T, D
v Pending Electrical Classifications FDZ, CDZ, GA4, GA8, GDZ
x Available with version N, T, D

244LVP LevelStar Buoyancy Transmitter for Liquid Level, Interface and Density

- Communication HART (4-20 mA)
- Configuration via FDT-DTM
- Multilingual full text graphic LCD
- IR communication as a standard
- Conventional operation with local keys
- Easy adaptation to the measuring point without calibration at the workshop
- Backdocumentation of measuring point
- Configurable safety value
- Software lock against unauthorized operation
- Simulation of analog output for loop-check
- Local display in %, mA or physical units
- Signal noise suppression by Smart Smoothing
- Continuous self-diagnostics
- Linear or customized characteristic
- Process temperature from –50°C to +150°C
- Static pressure up to PN 40
- Micro sintermetal sensor technology

The buoyancy transmitter 244LVP LevelStar is designed to perform continuous measurements for liquid level, interface or density of liquids in the process of all industrial appli-cations. The measurement is based on the proven Archimedes buoyancy principle and thus extremely robust and durable. Measuring values can be transferred analog and digital. Digital communication facilitates complete operation and configuration via PC or control system. The 244LVP LevelStar measures with consistent reliability and high precision. For installations in contact with explosive atmospheres up to Zone 0, certificates are available.

For complete specifications, refer to Product Specification Sheet PSS EML1710 G-(en).

Input/Output

Measuring span . . . . . 2 to 20 N, continuously adjustable
Measuring ranges . . . . . 0-50 mm to 0-3 m, cont. adjustable
Density range . . . . . 100 <p <2000 kg/m³
Displacer (204DE)
Standard length . . . . . 350 to 3000 mm, 14 to 120 inch
Weight of displacer . . . . . max. 25 N
Characteristic . . . . . linear oder customized with up to 32 setpoints
Span ratio
Turn-down . . . . . 1:1 to 1:10 (1:20 on request)
Accuracy . . . . . ±0.2%; increased accuracy with customized adjustment
Transfer function . . . . . linear or customized with up to 32 setpoints
Configuration
- Digital via communication
- Digital via IrCom as a standard
- With local push buttons and LCD

Local display . . . . . multilingual, full graphic LCD, configurable in %, mA or phys. units, & messages in clear text
Load . . . . . $R_{Bmax} = (U_S - 12V)/24$ mA - 100 Ohm

Communication HART

Connection . . . . . Two-wire system
Supply voltage U_S . . . . . 12 to 42 V dc, V_{pp} <1%
Current sink . . . . . max. 24 mA
Signal range . . . . . 4 to 20 mA
Operating range . . . . . 3.8 to 20.5 mA (NE43)
Digital communication . . . HART Protocol, 1200 Baud
Handheld Terminal . . . . . HT 375/475
PC Software . . . . . WINxx and FDT/DTM
Hardware . . . . . HART Modem
Min. load . . . . . 250 Ohms
Failure handling
Substitute value . . . . . last value or safety value
Safety value . . . . . 3.6 to 23 mA, adjustable

Operating conditions

Process temperature . . . . –50°C to +150°C
Pressure rating
acc. to DIN . . . . . PN 40
acc. to ANSI . . . . . Class 150, 300
Ambient temperature . . . . –40°C to +85°C
Relative humidity . . . . . up to 100%
Condensation . . . . . permitted
Transportation
storage temperature . . . . –50°C to +85°C
Protection . . . . . IP 66 (acc. DIN EN 60 529)

How to Order – Specify model number 244LVP

Flange Material (Process wetted)	
1.4571 (316Ti)	-S
Titan 3.7025 / 3.7035[h]	-T
Sensor Material (Process wetted)	
316L / 1.4435 / 1.4404	S
Titan 3.7025 / 3.7035[h]	T
Flange Size	
DN50	5
DN80	8
2-Inch	2
3-Inch	3
Flange Pressure Rating & Contact Face	
PN16 to PN40, B1 (DIN EN1092-1)[a]	B1
PN16 to PN40, B2 (DIN EN1092-1)[a]	B2
PN16 to PN40, D (DIN EN1092-1)[a]	D1
ANSI Class 150, RF RF/SF (RF125)[b]	R1
ANSI Class 300, RF RF/SF (RF125)[c]	R2
ANSI Class 150, RJF[b][g]	J1
ANSI Class 300, RJF[c][g]	J2
Version	
Base	B
Cable Entry	
M20x1.5 Without Cable Gland	M
1/2-14 NPT Without Cable Gland	N
Communication	
HART	H
Electrical Classification	
ATEX intrinsic safe, Zone 1 – IIC T4	1C4
ATEX intrinsic safe, Zone 1 – IIC T6	1C6
ATEX intrinsic safe, Zone 2 – IIC T4	2C4
ATEX intrinsic safe, Zone 1 – IIB T6	D1B
ATEX explosion proof, Zone 1 – IIC T6	D1C
FM Nonincendive	NFM
FM explosion proof[d][m]	FDZ
GOST-R intrinsically safe, Zone 1 – IIC T6	GA1
GOST-R intrinsically safe, Zone 2 – IIC T6	GA2
GOST-R explosion proof, Zone 1 – IIC T6	GD1
Nepsi intrinsically safe T6[d]	NA6
Nepsi explosion proof[d]	NDZ
Brasil intrinsically safe T6[d]	BA6
Brasil explosion proof[d]	BDZ
CSA explosion proof[d][m]	CDZ
FM Intrinsically Safe	FAA
CSA intrinsically safe[d][m]	CAA
For General Purpose Areas, not explosion proof	ZZZ

8

Optional Features

Housing Complete Stainless Steel Without External Push buttons . . . . . -H

Tag No. Labeling

Stainless Steel Label Fixed With Wire . . . . . -L
Stainless Steel Label Fixed On Amplifier . . . . . -F

Certificates

EN 10204-2.1, Certificate Of Compliance . . . . . -1
EN 10204-2.2, Specific Test Report (Calibration) . . . . . -2
EN 10204-3.1, Inspection Certificate Of Process Wetted Metallic Material . . . . . -3
Comply With NACE Standard MR-01-75[(e)(f)] . . . . . -6
EN 10204-3.1, Inspection Certificate Of Process Wetted Material
with Copy of Original individual Material certificate . . . . . -9
SIL 2 Certificate . . . . . -Q

Notes

a Available with Flange Size 5 or 8
b Available with Flange Size 2 or 3
c Available with Flange Size 3
d Pending
e Only with Sensor Material N
f Restrictions concerning the limit of application for the used materials are considerable (NACE Standard MR-0175/2003, or ISO 15156-3)
g Not with Electrical Classification 0B4 and 0C4
h On request
i Only with Electrical Classification 1 C4, 1C6, D1B, D1C, 2C4, GA1, GA2, GD1, NA6, NDZ, BA6, BDZ, ZZZ
k Pending for Version N 1C6, 1B6
m Only Version B

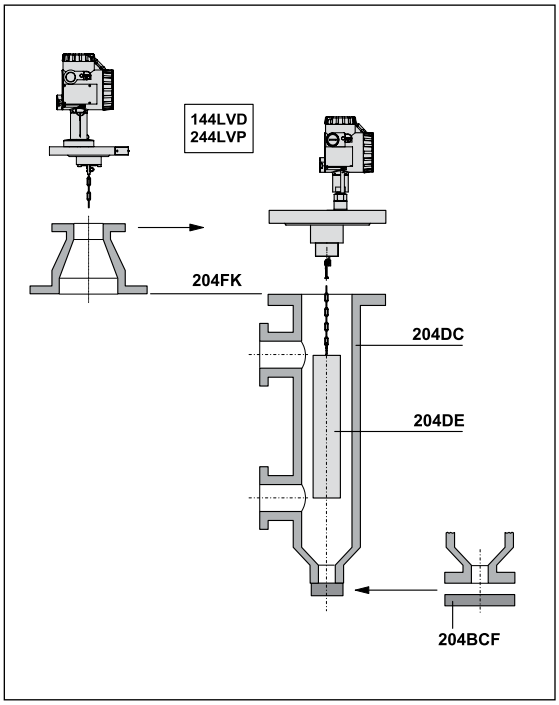

Required Tags

Calibrated Range
Ranges: 0 to 100% or
0 to 2kg or
0 to 19.6N or
0 to 2 kgf
Span Limits: 10 to 100% or
0.2 to 2 kg or
2 to 19.6 N or
0.2 to 2 kgf
Lower Density: user input
Upper Density: user input
Tag No. Labeling S: user input
Tag No. Labeling L: user input
Tag No. Labeling F: user input

Overview Accessories

For Displacer 204DE, Displacer Chamber 204DC, Flange combination 204FK, Flange Kit 204BCF see 204xx, or Product Specifications PSS EML0901 A-(en), 204.. Accessories for Buoyancy Transmitter.

167LP Pneumatic Buoyancy Transmitter with Torque Tube for Liquid Level, Interface and Density

This transmitter is designed to perform measurements for liquid level, interface and density of liquids. The measurement is based on the Archimedes buoyancy principle.

For complete specification, refer to Product Specification Sheet PSS EML0110 A-(en)

- Level transmission between vessel and transmitter by torque tube
- Applicable for service temperatures from –196°C to +400°C and pressures up to PN 250
- The span can be set over a 1:5 ratio
- A wide selection of materials facilitates service under corrosive conditions
- Material opproval certificates to EN 10204-3.1 available
- Various licences in accordance with national regulations
- Licensed for use on sea ships in the Germanische Lloyd class, or on other structures classified by Germanische Lloyd

8

Input

Measuring span . . . . . .3 to 15 N
Density range . . . . . .100 <ρ <1600 kg/m³
Standard lengths of
displacers 204DE . . . . . .350 to 3000 mm
14 to 120 inch
Weight of displacer . . . . . .max. 25 N
Output . . . . . .0.2 to 1 bar/3 to 15 psi/20 to 100 kPa/0.2 to 1 kp/cm²
Supply air. . . . . .1.4 ±0.1 bar or 20 ±1.4 psi

Transitional Behavior

Relative error. . . . . .<1%
Sensitivity. . . . . .<0.1%
Ambient temperature
influence . . . . . .<0.2%/10 K
Process temperature
influence . . . . . .<0.1%/10 K
Supply air influence . . . . . .<0.2%/0.1 bar
Air consumption. . . . . .<200 l/h
Air capacity . . . . . .1200 l/h
Load effect
(measured at 0.6 bar) . . . . .+3% for 400 l/h exhaused flow -3% for 400 l/h delivered flow

Operating conditions

Process temperature . . . . . .-196°C to +400°C
Pressure rating
acc. to DIN. . . . . .PN 16, 40, 63, 100, 160, 250
acc. to ANSI. . . . . .Class 150, 300, 600, 900, 1500
with heating jacket. . . . . .wafer body max. PN 160/Class 900; heating jacket PN 25, heating with saturated steam or thermal oils
Ambient temperature . . . . . .-40 to +90°C
Relative humidity . . . . . .<100%
Condensation . . . . . .permitted
Transportation and
storage temperature . . . . . .-40 to +90°C
Protection class. . . . . .IP 55 (acc. to DIN 40 050)

The device can be operated at a class D2 location in accordance with DIN IEC 654, part 1.

Mounting

Mounting method . . . . . .sandwich mounted
acc. to DIN. . . . . .DN 80, DN 100
acc. to ANSI. . . . . .3 inch, 4 inch
Pneum. connections . . . . . .internal thread DIN 45 141-Q ¼-18 NPT

How to Order – Specify model number 167LP

Wafer Body with Indicator (Flange Size and Pressure Rating)

DN80 PN16-40 (available with Contact Face C)	-20
DN80 PN16-160 (available with Contact Face U, N)	-21
DN80 PN16-250 (available with Contact Face E, L)	-22
DN100 PN16-160 (available with Contact Face U, N)	-23
DN100 PN16-250 (available with Contact Face E, L)	-24
DN100 PN16-40 (available with Contact Face C)	-25
3-Inch ANSI Class 150	-31
3-Inch ANSI Class 300/600/900	-32
3-Inch ANSI Class 1500	-34
4-Inch ANSI Class 150	-41
4-Inch ANSI Class 300/600/900	-42
4-Inch ANSI Class 1500	-44

Wafer Body Contact Face

Type C/C Raised Face (Rz 40 - 160) Per DIN 2526 (available with -20, -25)	C
Type E/E Raised Face (Rz 0 - 16) Per DIN 2526 (available with -22, -24)	E
Type N/F (Grove) Per DIN 2512 (available with -21, -23)	U
Type N/N (Grove) Per DIN 2512 (available with -21, -23)	N
Type L/L DIN 2696 (available with -22, -24)	L
Type RF/RF Raised Face Per ANSI B16.5 (available with -31, -32, -34, -41, -42, -44)	R
Type RJF/RJF Ring Joint Face Per ANSI B16.5 (available with- 31, -32, -34, -41, -42, -44)	J
Type SF/SF Smooth Finish (125 microinch) (available with -31, -32, -34, -41, -42, -44)	S

Wafer Body Material (Process Wetted)

Carbon Steel 1.0460 (A-105)	K
1.4404 (316L)	S
Hastelloy C	C

Wafer Body Mounting Direction (Transmitter on body)

Right Hand Mounted	R
Left Hand Mounted	L

Torque Tube Material (Process Wetted)

316 (1.4571/1.4404/1.4435)	S
Hastelloy C	C
Inconel 600	I
Monel	M

Signal Range

0.2 To 1.0 bar	1
3 To 15 psi	2
20 To 100 kPa	3
0.2 To 1.0 kp/cm^2	4

Optional Features

Oil Damping	-D
Electrical Certificates	
ATEX – II 1/2 G c IIC (Zone 0) for media AI, AII, B[c]	-E
ATEX – II 2 G c IIC (Zone 1) for media AI, AII, B	-P
Overfill Protection Per WHG For Environmental Pollution Fluids[e]	-V
Certificates	
EN 10204-2.1	-1
EN 10204-2.2 Specific Test Report (Calibration)	-2
EN 10204-3.1 Inspection Certificate of Process Wetted Metallic Material	-3
PED 97/23/EC additional unit verification, according to module F/G	-4
Comply with NACE Standard MR-01-75 (available with Wafer Body Material Code S and Torque Tube Material Code C, I or M only)	-6
Material Test	
X-Ray And Isotope Test For Weldings	-7
Dye Penetrate Test	-8
Tag No. Labeling	
Stainless Steel Label Fixed With Wire	-L

Notes

c Available with Contact Face E, N, R & S
e Not available with Wafer Body -33, -34, -43 & -44

8

204xx Accessories for Buoyancy Transmitter

Buoyancy transmitters to measure liquid level, interface and density are used for open or closed vessels or containers. They can be mounted directly on top of the vessel, or if the application requires, on a side mounted cage. Depending on application and vessel design various installation accessories and the applicable displacer have to be selected.

For complete specification, refer to Product Specification Sheet PSS EML0901 A-(en)

- Universally applicable for all FOXBORO ECKARDT buoyancy transmitters with displacers
- Standards according to DIN and ANSI
- Various connections, dimensions and materials
- Displacers with custom dimensions and material
- Certification according to "Pressure Equipment Directive" (PED)
- Certified as part of an overfill protection according to WHG
- Certified for use in Zone 0

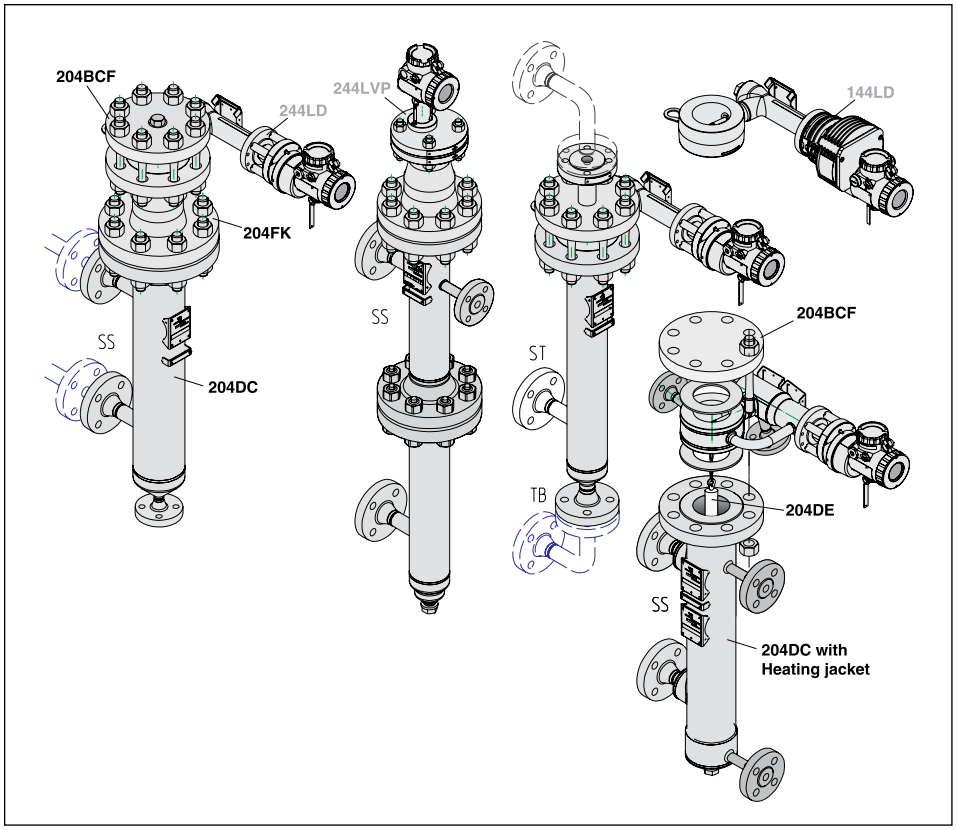

204DE Displacer element
204DC Displacer chamber
204FK Flange combination kit
204BCF Flange kit

How to Order – Specify model Displacer Element 204DE

Displacer for Buoyancy Transmitters from 2N buoyancy up to 20N

Range of Application[a]

Liquid Level – Media: Liquid/Gas or Air	
(Densitydifference = $9x10^3$ lbm/in^3 to $72.2x10^{-3}$ lbm/in^3)	
(Densitydifference = 250 kg/M^3 to 2000 kg/M^3)	-S
Interface Level/Density – Media: Liquid 1/Liquid 2	
(Densitydifference = $3.6x10^{-3}$ lbm/in^3 to $22.7x10^{-3}$ lbm/in^3)	-T

Displacer Material

316L (1.4404 / 1.4435 / 1.4571)	S
PTFE (not for application in Zone 0)	P
PTFE With 25% Carbon	O
Hastelloy C	C
Inconel 600 (2.4816)	I
Monel 400 (2.4360)	M
Titan (3.7035)	T

Pressure Rating

Up toPN 100/Class 600	D
Up to PNI6O/Class 900	E
Up to PN 250/Class 1500	F
Up to PN 500/Class 2500	G

Suitable for Flange Size (at top of vessel/chamber)

DN50	0
DN70	1
DN80	2
DN100	3
DNI50	4
2 inch	5
3 inch	6
4 inch	7
6 inch	8

Displacer Length "L" (inches are approximate)

for Displacer Material Codes P and O	
300 mm (12 in) to 2000 mm (79 in) without partitioning	A
2001 mm (79 in) to 4000 mm (157 in) One partition point	B
4001 mm (157 in) to 6000 mm (236 in) Two partition points	C
6001 mm (236 in) to 8000 mm (315 in) Three partition points	D
8001 mm (315 in) to 10000 mm (394 in) Four partition points	E
10001 mm (394 in) to 12000 mm (472 in) Five partition points	F
for Displacer Material S, C, I, M, and T	
300 mm (12 in) to 3000 mm (118 in) without partitioning	K
3001 mm (118 in) to 6000 mm (236 in) One partition point	L
6001 mm (236 in) to 9000 mm (354 in) Two partition points	M
9001 mm (354 in) to 12000 mm (472 in) Three partition points	N
12001 mm (472 in) to 15000 mm (591 in) Four partition points	0

Material and Length of the Suspension (Length "b")[d]

316L / 1.4404 / ...	Standard length of Suspension[b]	S1
316L / 1.4404 / ...	Customized Suspension Length[c]	S2
Hastelloy C	Standard length of Suspension[b]	C1
Hastelloy C	Customized Suspension Length[c]	C2
Inconel	Standard length of Suspension[b]	I1
Inconel	Customized Suspension Length[c]	I2
Monel	Standard length of Suspension[b]	M1
Monel	Customized Suspension Length[b]	M2
Titan	Standard length of Suspension[b]	T1
Titan	Customized Suspension Length	T2

8

Optional Features

for application in Zone 0 (Additional grounding rope) (not available with Displacer Material: P)	E
Damping Spring (Mat. 1.4301, Max. 250° C [482° F])[f]	-D
Damping Spring (Mat. HC, Max. 350° C [662° F])[f]	-C
Degreased	-O
Tag No. Labeling	
Stainless Steel Label Fixed With Wire (Text required)	-L
Certificates	
EN 10204-2.1, Certificate Of Compliance	-1
EN 10204-3.1, Inspection Certificate Of Process Wetted Metallic Material (not available with Displacer Material: P and 0)	-3
PMI – Test (not available with Displacer Material: P and 0)	-5

Notes

a Upper and Lower Medium Density required (at operating temperature)
b Only in connection with Modelcode 204DC
c Exact length required (Contact face of flange to upper end of displacer)
d All ±8mm (0.3inch)
e Pending
f Required for 244LD Option -G

Tags

Length "b": required for Material & Suspension Length codes S2, C2, 12, M2, T2

Press. Rating Chamber: required for Material & Suspension Length codes S2, C2,12, M2, T2
List = PN16; PN40; PN63; PN100; PN160; PN250; PN400; PN500; Cl.150; Cl.300; Cl.600; Cl.900; Cl.1500; Cl.2500

Length "L": required
300 to 2000 mm or 11.81 to 78.74 in – for Displacer Length code A
2001 to 4000 mm or 78.78 to 157.48 in – for Displacer Length code B
4001 to 6000 mm or 157.52 to 236.22 in – for Displacer Length code C
6001 to 8000 mm or 236.26 to 314.96 in – for Displacer Length code D
8001 to 10000 mm or 315 to 393.70 in – for Displacer Length code E
10001 to 12000 mm or 393.74 to 472.44 in – for Displacer Length code F
300 to 3000 mm or 11.81 to 118.11 in – for Displacer Length code K
3001 to 6000 mm or 118.15 to 236.22 in – for Displacer Length code L
6001 to 9000 mm or 236.26 to 354.33 in – for Displacer Length code M
9001 to 12000 mm or 354.37 to 472.44 in – for Displacer Length code N
12001 to 15000 mm or 472.48 to 590.55 in – for Displacer Length code 0

Lower Density: required; select kg/m3 or lbm/in3

Upper Density: required; select kg/m3 or lbm/in3

Static Pressure (actual): required
-1 to 100 bar; -14.5 to 600 psig – for Pressure Rating code D
-1 to 160 bar; -14.5 to 900 psig – for Pressure Rating code E
-1 to 250 bar; -14.5 to 1200 psig – for Pressure Rating code F
-1 to 500 bar; -14.5 to 2500 psig – for Pressure Rating code G

Tag No. Labeling: required with Optional Feature codes -L and -S

Use with Transmitter: required List = 144LD; 144LVD; 244LD; 244LVP; 167LP

DISPLACER CHAMBER 204DC
Displacer chambers are offered in four vessel mounting arrangements. The length L between the connection flanges corresponds to the displacer element length.
For use as a part of an overfill protection the same length of displacer element and chamber is required.

Connection	144LVD 244LVP	144LD 244LD 167LP
Side-Side	yes	yes
Side-Bottom	yes	yes
Side-Top	no	yes
Top-Bottom	no	yes
with heating jacket	yes	yes

Materials,
Pressure Ratings,
Flange Sizes,
Contact Faces,
Pipe Sizes,
Drain Types: Flange, Screw, Pipe piece for welding
Heating Jacket
see Model Codes on the following pages

Displacer chamber 204DC; Connections

without heating jacket				with heating jacket
Side – Side	Side – Bottom	Side – Top	Top – Bottom	e.g. Side – Side

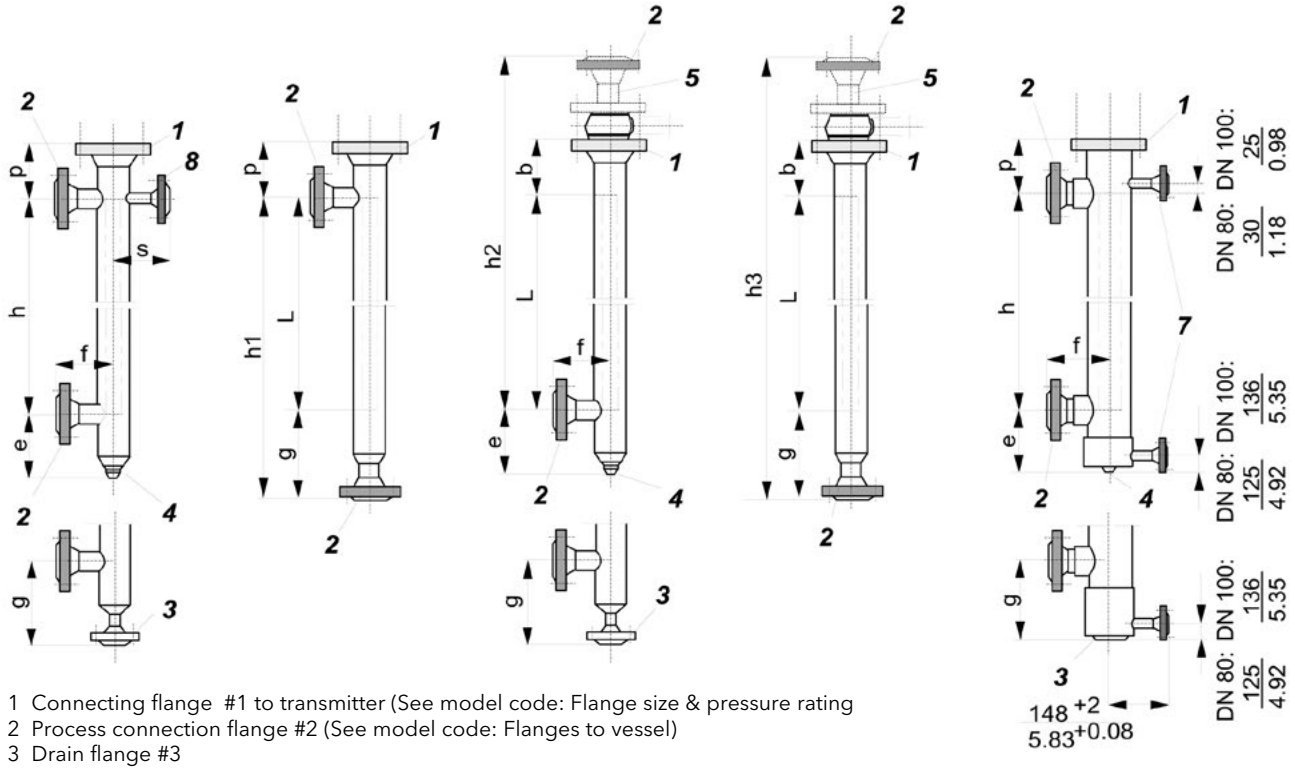

1 Connecting flange #1 to transmitter (See model code: Flange size & pressure rating
2 Process connection flange #2 (See model code: Flanges to vessel)
3 Drain flange #3
4 Drain plug #4
5 Flange combination 204FK (only 244LD or 167LP)
7 Connection flange for heating jacket DN 15, PN 40, DIN 2135, max. working pressure 25 bar / 362 psi
8 Flushing connector

L = Length of displacer element = max. span

How to Order – Specify model Displacer Chamber 204DC

Allows the pneumatic and Electronic Buoyancy Transmitters to be easily mounted to a wide array of tanks and vessels

Mounting Type (Flanges to Vessel)

Side - Side	-SS
Side - Bottom	-SB
Side - Top (not for LVD and LVP)	-ST
Top - Bottom (not for LVD and LVP)	-TB

Material

Carbon Steel – Flanges 1.0460; – Pipes 1.0345 (application from -10° C to 350° C)	K
1.4571 (316 TO (application from -60° C to 400° C)	E
1.4571 (316 Ti) (application from -196° C to 400° C)	F
1.4571 (316 Ti) (application from -60° C to 500° C)	G
1.4404 (316 L) (application from -60° C to 400° C)	S
1.4404 (316 L) (application from -196° C to 400° C)	U
1.4404 (316 L) (application from -60° C to 500° C)	T
1.4541 (application from -60° C to 400° C)	H
1.4541 (application from -196° C to 400° C)	Q
1.4541 (application from -60° C to 500° C)	J
DUPLEX – 1.4462 (application from -10° C to 280° C)	N
INCONEL 600 – 2.4816 (application from -10° C to 450° C)	R
INCONEL 825 – 2.4858 (application from -10° C to 450° C)	I
Hastelloy C (application from 1 96° C to 400° C)	C

Pressure Rating

PN16	A
PN40	B
PN63	C
PN100	D
PN160	E
PN250	F
Class 150	I
Class 300	J
Class 600	K
Class 900	L
Class 1500	M

Flange Size (to transmitter)

DN50[h]	0
DN80[d]	1
DN100[d]	2
DN150[c][e]	3
2 inch[g]	4
3 inch[f]	5
4 inch[f]	6
6 inch[c][g]	7

Contact Face (Transmitter Mounting Flange)

Type B1 according DIN EN 1092-1[h]	M
Type B2 according DIN EN 1092-1[i]	O
Type C according DIN EN 1092-1[d]	P
Type D according DIN EN 1092-1[d]	Q
Type L Lens according D1N2696[k]	L
Type RF/SF (RA = 125 µm) Face according ANSI B16.5[f]	R
Type RJF Ring Joint Face according ANSI B16.5[f]	J
Type E Spigot according DIN EN 1092-1[d]	X
Type F Recess according DIN EN 1092-1[d]	Y
Type LM Large Male according ANSI B16.5[f]	W
Type LF Large Female according ANSI B16.5[f]	Z
Type LT Large Tongue according ANSI B16.5[f]	A
Type LG Large Groove according ANSI B16.5[f]	B
Type ST Small Tongue according ANSI B16.5[f]	G
Type SG Small Groove according ANSI B16.5[f]	H

Flange Size/Pipe Size (to Vessel)

DN15[d]	A1
DN15 Connection pipe 60 mm extended[d]	A2
DN25[d]	C1
DN25 Connection pipe 60 mm extended[d]	C2
DN40[d]	D1
DN40 Connection pipe 60 mm extended[d]	D2
DN50[d][v]	E1
DN50 Connection pipe 60 mm extended[d][v]	E2
½-inch[f]	G1
½-inch Connection pipe 60 mm extended[f]	G2
1-inch[f]	H1
1-inch Connection pipe 60 mm extended[f]	H2
1½-inch[f]	I1
1½-inch Connection pipe 60 mm extended[f]	I2
2-inch[f][v]	J1
2-inch Connection pipe 60 mm extended[f][v]	J2

Contact Face (Flanges to Vessel)

Type B1 according DIN EN 1092-1[h]	M
Type B2 according DIN EN 1092-1[i]	O
Type C according DIN EN 1092-1[i]	P
Type D according DIN EN 1092-1[i]	Q
Type L Lens according D1N2696[k]	L
Type RF/SF (RA = 125 microinch) Face according ANSI B16.5[f]	R
Type RJF Ring Joint Face according ANSI B16.5[f]	J
Type E Spigot according DIN EN 1092-1[i]	X
Type F Recess according DIN EN 1092-1[i]	Y
Type LM Large Male according ANSI B16.5[f]	W
Type LF Large Female according ANSI B16.5[f]	Z
Type LT Large Tongue according ANSI B16.5[f]	A
Type LG Large Groove according ANSI B16.5[f]	B
Type ST Small Tongue according ANSI Bi6.5[f]	G
Type SG Small Groove according ANSI B16.5[f]	H
Pipe piece for welding	S

Drain (Flange, Screw, Pipe Piece for Welding)

DN15[d][u]	A
DN20[u][e]	B
DN25[d][u]	C
DN40[d][u]	D
DN50[d][u]	E
½-inch[f][u]	F
¾-inch[f][u]	G
1-inch[f][u]	H
1½-inch[f][u]	I
2-inch[f][u]	J
G ¾ female thread[u]	K
¾-14NPT female thread[u]	L
Without[t]	U

Drain Contact face

Type B1 according DIN EN 1092-1[h][s][u]	M
Type B2 according DIN EN 1092-1[i][s][u]	O
Type C according DIN EN 1092-1[i][s][u]	P
Type D according DIN EN 1092-1[i][s][u]	Q
Type L Lens according DIN2696[k][s][u]	L
Type RF/SF (RA = 125 microinch) Face according ANSI B16.5[f][s][u]	R
Type RJF Ring Joint Face according ANSI B16.5[f][s][u]	J
Type E Spigot according DIN EN 1092-1[i][s][u]	X
Type F Recess according DIN EN 1092-1[i][s][u]	Y
Type LM Large Male according ANSI B16.5[f][s][u]	W
Type LF Large Female according ANSI B16.5[f][s][u]	Z
Type LT Large Tongue according ANSI Bi6.5[f][s][u]	A
Type LG Large Groove according ANSI Bi6.5[f][s][u]	B
Type ST Small Tongue according ANSI B 16.5[f][s][u]	G
Type SG Small Groove according ANSI B16.5[f][s][u]	H
Pipe piece for welding[m][u]	S
with female thread[n][u]	T
without[t]	U

Type of Arrangement

Standard	X
Additional partition point with Bolts and Nuts, Spiralgasket Steel/Graphite Flange Face (acc Transmitter Mounting Flange): Flanges aec. DIN EN – Form B1 resp. B2 Flanges acc. ANSI – Form RF/SF	A
Additional partition point with Bolts and Nuts, Spiralgasket 1.4571/Graphite Flange Face (acc Transmitter Mounting Flange): Flanges acc. DIN EN – Form B1 resp. B2 Flanges acc. ANSI – Form RF/SF	C
Additional partition point with Bolts and Nuts, Spiralgasket Hastelloy C/Graphite Flange Face (acc Transmitter Mounting Flange): Flanges acc. DIN EN – Form B1 resp. B2 Flanges acc. ANSI – Form RF/SF	D
With heating jacket made of 1.4571 (316Ti); 1.4404 (316L) – connecting flanges B1/DN15, PN40 (DIN EN 1092-1)	6
With heating jacket made of 1.4571 (316Ti); 1.4404 (316L) – connecting flanges B1/DN25, PN40 (DIN EN 1092-1)	7
With heating jacket made of 1.4571 (316Ti); 1.4404 (316L) – connecting flanges B2/DN15, PN40 (DIN EN 1092-1)	8

Type of Arrangement (continued)

With heating jacket made of 1.4571 (316Ti); 1.4404 (316L) – connecting flanges B2/DN25, PN40 (DIN EN 1092-1)	9
With heating jacket made of 1.4571 (316Ti); 1.4404 (316L) – connecting flanges RF/SF, ½ in, class 300	S
With heating jacket made of 1.4571 (316Ti); 1.4404 (316L) – connecting flanges RF/SF, 1 in, class 300	T
With heating jacket made of 1.4571 (316Ti); 1.4404 (316L) – connecting flanges RJF, ½ in, class 300	U
With heating jacket made of 1.4571 (316Ti); 1.4404 (316L) – connecting flanges RJF, 1 in, class 300	V

Chamber for Length of Displacer "L" (indicate exact measure of L when ordering)

For Code SS "L" = Distance between center of flanges to Vessel

For length range

"L" >300 mm to 1000 mm (>12 inch to 40 inch)	A
"L" >1000 mm to 2000 mm (>40 inch to 79 inch)	B
"L" >2000 mm to 3000 mm (>79 inch to 118.5 inch)	C
"L" >3000 mm to 4000 mm (>118.5 inch to 157.5 inch)[w]	D
"L" >4000 mm to 5000 mm (>157.5 inch to 197 inch)[w]	E
"L" >5000 mm to 6000 mm (>197 inch to 236 inch)[w]	F

Optional Features

Unit Degreased (no Material Factor)	-O
Corrosion addition 2-3 mm[o]	-Z
Drain valve with welding tap and ¾-NPT female[p]	-V
Drain valve with welding tap and ¾-NPT male[p]	-W
Additional flushing connector on top DN15 or ½" (contact face same as flange to vessel)	-X
Additional flushing connector on top DN25 or 1" (contact face same as flange to vessel)	-Y

Tag No. Labeling:

Stainless Steel Label fixed with wire (no Material-Factor)	-L

Certificates:

EN 10204-2.1 Certificate of Compliance (no Material-Factor)	-1
EN 10204-3.1 Inspection Certificate of process wetted metallic material (no Material-Factor)	-3
PED 97/23/EC additional unit verification, according to Module F/G (no Material-Factor)[q]	-4
Comply with NACE Standard MR-01-75 (requires Option -3) (no Material-Factor)[x][y][z]	-6
Wasserstand 100 (no Material-Factor)[r]	-9

Material Tests:

X-Ray & Isotope test for weldings (no Material-Factor)	-7
Dye penetrate test (no Material-Factor)	-8
PMI - Test (no Material-Factor)	-5

Notes

a pending
c Not with TYPE OF ARRANGEMENT: 6, 7, 8, 9, S, T, U, V
d Not with PRESSURE RATING CODE: I, J, K, L, M
e Not with PRESSURE RATING CODE: D, E, F, I, J, K, L, M
f Not with PRESSURE RATING CODE: A, B, C, D, E, F
g Not with PRESSURE RATING CODE: A, B, C, D, E, F, K, L, M
h Not with PRESSURE RATING CODE: C, D, E, F, I, J, K, L, M
i Not with PRESSURE RATING CODE: A, B, I, J, K, L, M
k Not with PRESSURE RATING CODE: A, B, C, D, I, J, K, L, M
m Available with DRAIN: A, B, C, F, G, H
n Available with DRAIN: K & L
o Not available with MATERIAL CODE E, F, G, 5, U, T, H, 0, J, N, I, R, C
p Available with DRAIN CONTACT FACE S
q Restrictions concerning the limit of application for the used materials are considering (NACE Standard MR 0175/2003, bzw. ISO 15156)
r Available with Mounting Type Code SS, ST and Drain Code B, C, G, H
s Not available with DRAIN; K & L
t Not with MOUNTING TYPE: -SS, -ST
u Not with NOUNTING TYPE: -B, -TB
v Not with FLANGE SIZE (to Transmitter) 0 or 4
w With TYPE OF ARRANGEMENT A, B, C or D
x Not with MATERIAL K or L
y With MATERIAL K or L
z Price for carbon steel is for amount of one chamber. For more amounts contact factory.

COVER FLANGE KIT
The cover flange kit is necessary for the sandwich type torque tube transmitters 244LD and 167LP.

Two seals, studs and nuts are included. Vent plug is optional.

BLIND FLANGE KIT
The Blind Flange kit is required to close both the drain flange and the top mounted flange combination, if no other additional equipment is connected.
One seal, studs and nuts are included. Vent plug is optional.

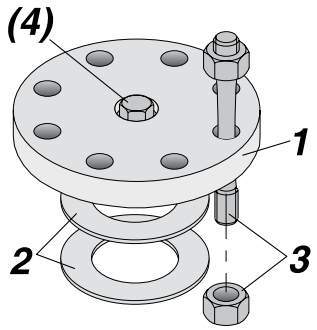

Notes
1 Flange
2 Gaskets
3 Bolts and nuts
4 Venting plug with G ¾ A (DIN ISO 228) or ¾ NPT

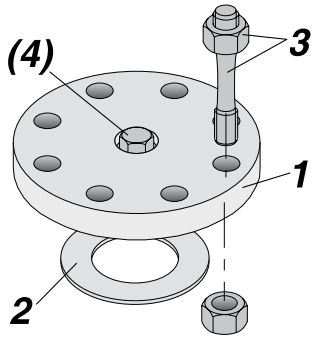

Material,
Flange Size,
Pressure Rating,
Contact Face,
Gaskets,
Bolts and Nuts
see Model Codes on the following pages

How to Order – Specify model Cover Flange Kit 204BCF (Flange, Gasket, Nuts and Bolts)

Material

Carbon Steel 1.0460/P25OGH (A-105) (application from -60° C to 460 ° C)[d]	-K
16Mo3 (1.5415) (application from -10° C to 500 ° C)[d]	-O
1.4571 (316 Ti) (application from 200° C to 500 ° C)[d]	-E
1.4404 (316L) (1.4435 with FLANGE SIZE 15.16 and CONTACT FACE H) (application from -200° C	-S
1.4541 (application from -200° C bis 500 ° C)[d]	-H
1.4462 (DUPLEX) (application from -10° C bis 280 ° C)[d]	-N
1.4816 (INCONEL 600) (application from -10° C bis 450 ° C)[d]	-R
1.4858 (INCONEL 825) (application from -10° C bis 450 ° C)[d]	-I
Hastelloy C (application from -200° C bis 450 ° C)[d]	-C

Flange Size

DN15[b]	11
DN20 (not for PRESSURE RATING E, F, G, H)[b]	12
DN25	13
DN50	14
DN70	15
DN80	16
DN100	17
½-inch[b]	18
¾-inch[b]	19
1-inch	20
2-inch	21
3-Inch	22
4-Inch	23

Pressure Rating

PN 16 (with FLANGE SIZE -11,-12, -13, -14, -16, -17)	A
PN 40 (with FLANGE SIZE -11, -12, -13, -14, -16, -17)	B
PN 63 (with FLANGE SIZE -14, -16, -17)	C
PN 100 (with FLANGE SIZE -11, -13, -14, -16, -17)	D
PN 160 (with FLANGE SIZE -11, -13, -14, -16, -17)	E
PN 250 (with FLANGE SIZE -11, -13, -14, -16, -17)	F
PN 400 (with FLANGE SIZE -16)[b]	G
PN 500 (with FLANGE SIZE -15)[b]	H
Class 150 (with FLANGE SIZE -18 to -23)	I
Class 300 (with FLANGE SIZE -18 to -23)	J
Class 600 (with FLANGE SIZE -18 to -23)	K
Class 900 (with FLANGE SIZE -18 to -23)	L
Class 1500 (with FLANGE SIZE -18 to -23)	M

Contact Face

Type B1 according DIN EN 1092-1 (available with pressure rating A, B)	M
Type B2 according DIN EN 1092-1 (available with pressure rating A to G)	O
Type C according DIN EN 1092-1 (available with pressure rating A to G)	P
Type D according DIN EN 1092-1 (available with pressure rating A to G)	Q
Type E Spigot according DIN EN 1092-1 (available with pressure rating A to G)	X
Type F Recess according DIN EN 1092-1 (available with pressure rating A to G)	Y
Type L (available with pressure rating D, E, F, G)	L
Type L Lens High pressure (available with IG- Standard for PRESSURE RATING H and Lens acc. DIN 2596with NENNDRUCK G)	H
Type RF/SF (available with pressure rating I to M) – RF Raised Face per ANSI B16.5	R
Type RJF (available with pressure rating I to M) – RJF Ring Joint Face per ANSI B16.5 by flange size -18 and -19 and pressure rating "I" not with contact face "J"	J
Type LM Large Male according ANSI B16.5	W
Type LF Large Female according ANSI B16.5	Z
Type LT Large Tongue according ANSI B16.5	A
Type LG Large Groove according ANSI B16.5	B
Type ST Small Tongue according ANSI B16.5	G
Type SO Small Groove according ANSI B16.5	U

Gaskets[c]

Graphite[d][g]	G
Carbon Steel[d]	K
16Mo3[d]	O
1.4571 (316 Ti)[d]	E
1.4404 (316 L)[d]	S
1.4541[d]	H
1.4462 (DUPLEX)[d]	N
1.4816(INCONEL 600)[d]	R
1.4858 (INCONEL 825)[d]	I
Hastelloy C[d]	C
Without gasket with CONTACT FACE H	X

8

Bolts and Nuts

Bolts (long) with reduced shank and nuts for transm. sandwich mounting a. product temp. > -10° C (Steel)[f]	1
Bolts (long) with reduced shank and nuts for transm. sandwich mounting a. product temp. > -196° C (SS)[f]	2
Bolts (short) with reduced shank and nuts for flange connection and product temp. > -10° C (Steel)[h]	3
Bolts (short)with reduced shank and nuts for flange connection and product temp. > 1 96°C (SS)[h]	4

Optional Features

Cleaned by oil and fat	-O
Vent Plug G ¾	-A
Vent Plug NPT ¾	-B

Tag No. Labeling

Stainless Steel Label Fixed With Wire	-L

Certificates

EN 10204-2.1, Certificate Of Compliance	-1
EN 10204-3.1, Inspection Certificate Of Process Wetted Metallic Material	-3
Comply With NACE Standard MR-0175[a]	-6

Notes

a Restrictions concerning the limit of application for the used materials are considering (NACE Standard MR 0175/2003, resp. ISO 15156)

b Not with OPTION -A, -B

c Spiral gaskets including Graphite

d Not CONTACT FACE H

f Flange size -15, -16, -17, -22, -23 only

h Not FLANGE SIZE 15

k Only GASKET: G

l Not released

For flange mounting
e.g. top mounting on chambers or vessels

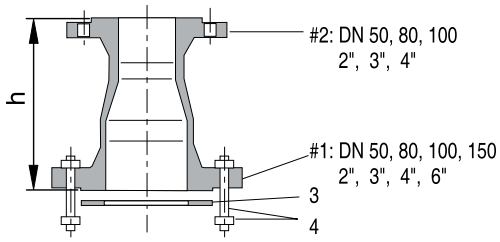

FLANGE COMBINATION 204FK
The flange combination is used, if

- displacer chamber with Side-Top (-ST) or Top-Bottom (-TB) design is applied to a torque tube transmitter Model 244LD or 167LP
- a transmitter is mounted on a DN 50 (2 inch) or DN 150 (6 inch) flange connection
- the cover flange is to be taken off for service without removing the transmitter.

The flange combination will be supplied with gaskets, bolts and nuts for connection to the transmitter.

For sandwich mounted transmitters
e.g. top-bottom or top-side chambers

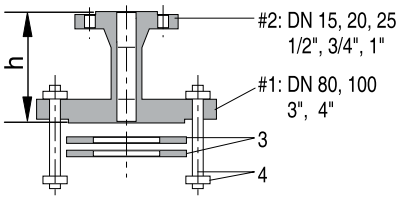

1 Flange size #1
2 Flange size #2
3 Gaskets
4 Bolts and nuts

Materials,
Flange Size #1,
Flange Size #2,
Static Pressure Rating,
Contact Face
see Model Codes on the following pages

Model Codes 204FK

How to Order – Specify model Cover Flange Combination 204FK (Includes Gaskets, Nuts & Bolts)

Material

Carbon Steel – Flanges 1.0460 (P25OGH); – Pipes 1.0345 (P235GH) application from -10° C to 350° C	-K
1.4571 (316 Ti) application from -60° C to 400° C	-E
1.4571 (316 Ti) application from -196° C to 400° C	-F
1.4571 (316 Ti) application from -60° C to 500° C	-G
1.4404 (316 L) application from -60° C to 400° C	-S
1.4404 (316 L) application from -196° C to 400° C	-U
1.4404 (316 L) application from -60° C to 500° C	-T
1.4541 application from -60° C to 400° C	-H
1.4541 application from -196° C to 400° C	-Q
1.4541 application from -60° C to 500° C	-J
DUPLEX – 1.4462 application from -10° C to 280° C	-N
INCONEL 600 – 2.4816 application from -10° C to 450° C	-R
INCONEL 825 – 2.4858 application from -10° C to 450° C[e]	-I
Hastelloy C application from -196° C to 400° C	-C

Pressure Rating

PN16	A
PN40	B
PN63	C
PN100	D
PN160	E
PN250	F
Class I50	I
Class 300	J
Class 600	K
Class 900	L
Class I500	M

8

Flange Size #1

DN50 (with PRESSURE RATING A, B, C, D, E, F)	0
DN80 (with PRESSURE RATING A, B, C, D, E, F)	1
DN100 (with PRESSURE RATING A, B, C, D, E, F)	2
DN150 (with PRESSURE RATING A, B, C, D, E, F)	3
2 Inch (with PRESSURE RATING I, J, K, L, M)	4
3 Inch (with PRESSURE RATING I, J, K, L, M)	5
4 Inch (with PRESSURE RATING I, J, K, L, M)	6
6 Inch (with PRESSURE RATING I, J, K, L, M)	7

Contact Face #1

Type B1 according DIN EN 1092-1 only with PRESSURE RATING A,B	M
Type B2 according DIN EN 1092-1 only with PRESSURE RATING A,B,C,D,E,F	O
Type C according DIN EN 1092-1 only with PRESSURE RATING A,B,C,D,E,F	P
Type D according DIN EN 1092-1 only with PRESSURE RATING A,B,C,D,E,F	Q
Type E Spigot according DIN EN 1092-1 only with PRESSURE RATING A,B,C,D,E,F	X
Type F Recess according DIN EN 1092-1 only with PRESSURE RATING A,B,C,D,E,F	Y
Type L Lens according DIN2696 only with PRESSURE RATING D,E,F	L
Type RF/SF (RA = 125 µm) according ANSI 1316.5 only with PRESSURE RATING I,J,K,L,M	R
Type RJF Ring Joint Face according ANSI B16.5 only with PRESSURE RATING I,J,K,L,M	J
Type LM Large Male according ANSI B16.5 only with PRESSURE RATING I,J,K,L,M	W
Type LF Large Female according ANSI B16.5 only with PRESSURE RATING I,J,K,L,M	Z
Type LT Large Tongue according ANSI B16.5 only with PRESSURE RATING I,J,K,L,M	A
Type LG Large Groove according ANSI B16.5 only with PRESSURE RATING I,J,K,L,M	B
Type ST Small Tongue according ANSI B16.5 only with PRESSURE RATING I,J,K,L,M	G
Type SG Small Groove according ANSI B16.5 only with PRESSURE RATING I,J,K,L,M	U

Flange Size #2

DN15 (with flange size #1 1 and 2)	A
DN20 (with flange size #1 1 and 2) not PRESSURE RATING E,F	B
DN25 (with flange size #1 1 and 2)	C
DN50 (with flange size #1 0, 1, 2 and 3)	D
DN80 (with flange size#1 0, 1, 2 and 3)	E
DN100 (with flange size #1 0, 1, 2 and 3)	F
½-inch (with flange size #1 5 and 6) not PRESSURE RATING I with CONTACT FLANGE J	H
¾-inch (with flange size #1 5 and 6) not PRESSURE RATING I with CONTACT FLANGE J	I
1-inch (with flange size #1 5 and 6)	J
2-inch (with flange size #1 4, 5, 6 and 7)	K
3-inch (with flange size #1 4, 5, 6 and 7)	L
4-inch (with flange size #1 4, 5, 6 and 7)	M

Contact Face #2

Type B1 according DIN EN 1092-1	with PRESSURE RATING A, B	M
Type B2 according DIN EN 1092-1	with PRESSURE RATING A, B, C, D, E, F	O
Type C according DIN EN 1092-1	with PRESSURE RATING A, B, C, D, E, F	P
Type D according DIN EN 1092-1	with PRESSURE RATING A, B, C, D, E, F	Q
Type E Spigot according DIN EN 1092-1	with PRESSURE RATING A, B, C, D, E, F	X
Type F Recess according DIN EN 1092-1	with PRESSURE RATING A, B, C, D, E, F	Y
Type L Lens according DIN2696	with PRESSURE RATING D, E, F	L
Type RF/SF (RA = 125 µm) according ANSI B16.5	with PRESSURE RATING I, J, K, L, M	R
Type RJF Ring Joint Face according ANSI B16.5	with PRESSURE RATING I, J, K, L, M	J
Type LM Large Male according ANSI B16.5	with PRESSURE RATING I, J, K, L, M	W
Type LF Large Female according ANSI B 16.5	with PRESSURE RATING I, J, K, L, M	Z
Type LT Large Tongue according ANSI B 16.5	with PRESSURE RATING I,J, K, L, M	A
Type LG Large Groove according ANSI B16.5	with PRESSURE RATING I, J, K, L, M	B
Type ST Small Tongue according ANSI B16.5	with PRESSURE RATING I, J, K, L, M	G
Type SG Small Groove according ANSI B 16.5	with PRESSURE RATING I, J, K, L, M	U

Gaskets for Flange Size #1

Graphite with CONTACT FACE #1 P, Q, A, B, G, U	G
Carbon Steel[b]	K
1.4571 (316 Ti)[b]	E
1.4404 (316 L) [b]	S
1.4541[b]	H
1.4462 (DUPLEX)[b]	N
1.4816 (INCONEL 600)[b]	R
1.4858 (INCONEL 825)[b][e]	I
Hastelloy C[b]	C

Bolts and Nuts

Steel Bolts (long) with reduced shank, nuts and 2 gaskets for transm. sandwich mounting. Product temp. > -10° C for FLANGE SIZE #1 1, 2, 5 and 6	1
SS Bolts (long) with reduced shank, nuts and 2 gaskets for transm. sandwich mounting. Product temp. > -196° C for FLANGE SIZE #1 1, 2, 5 and 6	2
Steel Bolts (short) with reduced shank, nuts and #1 gasket for flange connection. Product temp. > -10° C for FLANGE SIZE D 0 to 7 with FLANGE SIZE #2 D, E, F, K, L, M	3
Steel Bolts (short) with reduced shank, nuts and #1 gasket for flange connection. Product temp. > -196° C for FLANGE SIZE D 0 to 7 with FLANGE SIZE #2 D, E, F, K, L, M	4

Optional Features

Oxygen Service cleaned	-O

Tag. No. Labeling

Stainless steel label fixed with wire	-L

Certificates

EN 10204-2.1	-1
EN 10204-3.1	-3
PED 97/23/EC additional unit verification, according to module F/G	-4
Comply with NACE standard MR-0175[a]	-6

Material Test

PMI Test	-5
X-Ray and Isotope test for weldings	-7
Dye penetrate test	-8

8

Notes

a Restrictions concerning the limit of application for the used materials are considering (NACE Standard MR 0175/2003, bzw. ISO 15156)

b Spiralgaskets including Graphite (d) for PRESSURE RATING I, J, K, D, L, M

d Not Contact Face H

e Flange Size -15, -16, -17, -22, -23 only

The following chapter contains Product Specifications of the Instruments:

E27R	Series Electronic Indicating Recorders
740R	Series Digital Circular Chart Recorders
6100AF	Paperless Graphic Recorders
6180AF	Paperless Graphic Recorders

E27R Series Electronic Indicating Recorders

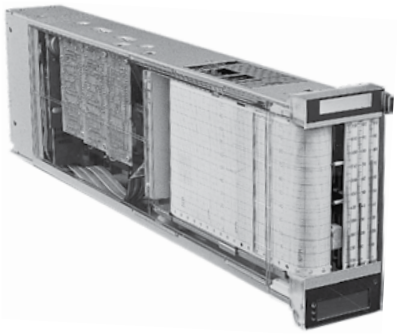

- Integral Power Supply for Three Transmitters
  - ✔ *provides power for 2-wire 4 to 20 mA dc transmitters.*
- Bold, Readable Displays
  - ✔ *highly visible red, green, and blue ribbon indicators.*
- Quick, Easy Replacement of Charts and Pens
  - ✔ *chart spool and snap-in pen cartridges readily accessible.*
- Simple Maintenance and Adjustment
  - ✔ *modular components.*
  - ✔ *disassembly not required.*
  - ✔ *may be adjusted while instrument is in operation.*

The E27R Series Electronic Indicating Recorder continuously indicates and records up to three separate electronic analog signals.
For complete specifications, refer to Product Specification Sheet PSS 2A-3A1 D.

Performance Specicifcations

Accuracy: ±0.5% of calibrated span.

Repeatability: 0.15% of calibrated span.

Physical Specifications

Mounting: Flush in panels 3 to 25 mm (1/8 to 1 in) thick using 202S Series Shelves. Require 1 unit width of mounting capacity.

Mounting Angle: Recorders may be mounted in panels inclined forward up to 15° or inclined backward up to 75° from vertical.

Indicating Scales: 1, 2, or 3 separate transparent process scales with black numerals and graduations located in front of ribbon type indicators.

Functional Specifications

Input Signal: 4 to 20 mA dc into 250 ohm; 1 to 5 or 0 to10 V dc (jumper selectable) into 100 kohm minimum for each pen.

Chart Drive Speed: 20 mm/h.

Electrical Classification: These instruments are designed for use in ordinary locations and Class I, Groups A, B, C, and D, Division 2 hazardous locations.

Pens: 1, 2, or 3, as specified:
Red Pen: Located in center position.
Green Pen: Located in inner position.
Blue Pen: Located in outer position.

Inking: Disposable fiber-tip snap-in pen cartridges. Each pen provides approximately a 3-month supply.

Supply Voltage and Frequency: 100, 120, 220, or 240 V ac +10%, -15%, 50 or 60 Hz, as specified.

Optional Features

Chart Drives: The following optional chart drives are available for either 50 or 60 Hz operation:
- ✔ Single Speed: 10, 40, 80, and 120 mm/h.
- ✔ Dual Speed: 20 mm/h and 20 mm/min or 20 mm/h and 40 mm/min.

How to Order—Specify model number E27R followed by order code for each selection

Number of Pens				
1 S	1R			
2 S	2R			
3 S	3R			
Supply Voltage				
120 V ac		A		
220 V ac		B		
240 V ac		C		
100 V ac		D		
Frequency				
50 Hz			5	
60 Hz			6	
Optional Alarm Lamps				
Three Light Emitting Diode (LED) alarm lamps, operated by an external contact				L

Specify Optional Features

Specify chart and dial ranges—refer to Chart and Dial Catalog 600

Specify mounting equipment (202S Series Shelves)

Specify nameplate and information for instrument tag

740R Series Digital Circular Chart Recorder

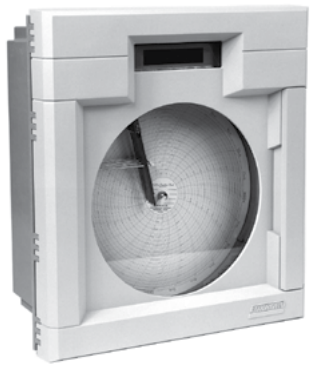

- Brilliant, 40-character dot matrix display
- Wide range of standard inputs including mA, mV, Thermocouple, and RTD
- Completely watertight and dusttight. Conforms to NEMA Type 4 requirements.
- Completely self-contained. Separate configurators are not required.
- Compatible with Model 40 Series mechanical recorders
- Fully isolated inputs and outputs
- Four independent timers for logic or event-driven activities

The 740R Digital Circular Chart Recorder indicates and continuously records up to four electronic analog signals on a 12-inch circular chart. This microprocessor-based unit also offers a wide variety of user-configurable process supporting functions such as alarms, totalizers, calculations, and curve characterizers. Refer to Product Specifications sheet PSS 2C-1A8 A for complete description and specifications.

Physical Specifications

Environmental Protection: Completely watertight and dust-tight, reinforced polyester enclosure. Conforms to the stringent requirements of NEMA Type 4.

Dimensions: Nominal 15.6 in wide by 17.3 in high by 7.9 in deep

Mounting: Surface, panel, or pipe

Display Format: Blue-green, fluorescent panel with 40 dot matrix characters

Functional Specifications

Pens: 1, 2, 3, or 4 as specified. Pen 1 (inner position) is red, pen 2 is violet, pen 3 is green, pen 4 (outer position) is blue.

Supply Power: 90 to 132 V or 180 to 264 V ac, as specified, 45 and 65 Hz, 30 watts (90 watts with optional enclosure heater coded)

Ambient Temperature Limits: 0 to 50°C (32 to 122°F)

Relative Humidity Limits: 5 and 95%, noncondensing

Input Signals: 0 to 20 mV through 0 to 100 V dc; RTD, ANSI, or IEC 100 ohm platinum, 10 ohm copper, 120 ohm nickel; thermocouple, ISA or ANSI Types T, J, E, C, L, K, N, R, S, and B. All inputs are fully isolated from line power, ground, and each other.

Signal Conditioning: Square root, 3/2 and 5/2 power; log 10

Chart Speed: Configurable from 1 to 4096 hours for each revolution

Charts: Approximately 10 complimentary, 24-hour charts with 0 to 100% graduations are supplied with the recorder. Order quantity and range of charts desired separately

Sample Rate: Two samples per second on each channel

Alarms: Up to 4 alarms with individual set points on each channel. Configurable for high, low, deadband, and rate-of-change alarm action.

Optional Features

- ✓ *Transmitter Power Supply:* 29 V dc for up to four 2-wire transmitters
- ✓ *Totalizer:* Up to four fully scalable totalizers. Configurable reset and preload functions
- ✓ *Calculations and Characterizer:* Standard arithmetic functions plus preconfigured specialized applications
- ✓ *Contact Outputs:* Dry relay contacts for alarm status and remote counter drivers
- ✓ *NEMA 4X:* Provides additional corrosion resistance in conformance with NEMA Type 4X requirements

How to Order—Specify model number 740RA followed by order code for each selection

Nominal Supply Voltage and Frequency					
V ac, 50/60 Hz	A				
240 V ac, 50/60 Hz	C				
Input Channel One					
0 to 20 mV through 0 to 5V, RTD and TC		1			
4 to 20 mA		3			
Input Channel Two					
None			0		
0 to 20 mV through 0 to 5 V, RTD and TC			1		
4 to 20 mA			3		
Input Channel Three					
None				0	
0 to 20 mV through 0 to 5 V, RTD and TC				1	
4 to 20 mA				3	
Input Channel Four					
None					0
0 to 20 mV through 0 to 5 V, RTD and TC					1
4 to 20 mA					3
Optional Selections					
28 V Transmitter Power Supply					A
Calculated Variables and Custom Curve					B
One Totalizer					C
Two Totalizers					D
Three Totalizers					E
Four Totalizers					F
Dual Ramp Generator					G
Tamper-Evident Feature					K
NEMA 4X Enclosure					L
Polycarbonate Door Windows					M
Pipe Mounting					N
Four Relay Outputs					R
Eight Relay Outputs					T
Eight Contact Inputs					U
Sixteen Contact Inputs					V

Remote Totalizer Outputs

This product and its components are protected by one or both of the following U.S. patents D333,631 and RE33,267. Corresponding patents have been issued or are pending in other countries.

6100AF and 6180AF Paperless Graphic Recorders

The Foxboro brand 6000 Series Paperless Graphic Recorders offer unrivaled input accuracy with a 125 ms total sample rate for up to 18 or up to 48 input channels, depending on the model selected. Input channels are freely configurable to suit your process requirements. Each instrument has an intuitive, touch screen display to enable operators to clearly view process data in varying formats. All have onboard Flash data storage capability, Ethernet communication, and a choice of removable media size and type, secure digital (SD) cards, and USB memory sticks. Data is stored in a tamper resistant binary format that can be used for secure, long term records of your process. The 6000 Series is truly designed for today's networked world and can be accessed via a Local Area Network (LAN), dial up connection, intranet, or internet.

- Color touchscreen display
- USB plug-and-play
- Up to 96 MB nonvolatile flash memory
- Ethernet TCP/ICP (Transmission Control Protocol/Internet Protocol)
- 125 ms parallel sampling
- Web Server allows "read only" remote access to recorder
- Data logging and archiving
- Auditor meets requirements of FDA Regulation 21 CFR
- Modbus RTU (Remote Terminal Unit)
- Supports Simple Network Time Protocol (SNTP)
- Batch Recording
- ASCII printer output
- Event Input selection to initiate internal actions
- Dynamic Host Configuration Protocol (DHCP)
- A perfect complement to the Foxboro broad range of field instrument measurement solutions:
  - Pressure measurements
  - Temperature measurements
  - Flow measurements
  - Level measurements
  - Conductivity measurements
  - pH measurements
- User defined screens with Screen Builder
- Remote monitoring using Bridge software
- Review and Review/QuickChart software
- Easy mounting to a vertical panel or to a panel sloped up to 45°, upward or downward
- Password controlled electronic front panel media flap lock
- EMC approved – CE and cUL
- Electrical Safety per BS EN61010

Standard Specifications[a]

Display: 6100AF – ¼VGA,5.5 inch
6180AF – XGA, 12.1 inch

Channels: 6100AF – Up to 18
6180AF – Up to 48

Relays: 6100AF – Up to 16
6180AF – Up to 36

Events Inputs: 24 (6 per option card)

Groups: 6 Standard (12 optional)

Auditor Features: Auditor or audit trail

Virtual Channels[b]*:* 36, 96, 128

Timers: 12 fitted as standard

Alarms: 4 per channel

Batch: Optional selection

Bridge-Remote Viewing Software:
Bridge Lite is standard. Bridge Full also offered.

Screen Builder: 24 (optional)

Security: Unlimited unique user names with configurable access permissions and passwords

Configuration Software: Standard

Review or Review/QuickChart Software: Lite is standard, Full also offered

Standard Views:
Vertical/Horizontal Trending
Vertical/Horizontal Bar Graphs
Circular Trend/Numeric Values

Notes

a Refer to PSS 2C-1C1 A for complete specifications
b Virtual channels can be configured as maths, totalizers, counters, or comms

How to Order – Specify model number 6100AF followed by order code for each selection

Number of Input Channels[a]										
0 Input Channels – 4 Option Boards allowed with this Selection	-0									
6 Input Channels – 4 Option Boards allowed with this Selection	-1									
12 Input Channels – 4 Option Boards allowed with this Selection	-2									
18 Input Channels – 2 Option Boards allowed with this Selection	-3									
Password Controlled Electronic Media Flap Lock										
None		N								
Electronic Lock on Media Flap		L								
Power Supply										
90 to 264 V ac, 45 to 65 Hz; or 110 to 370 V dc			1							
24 V Isolated Transmitter Power Supply										
None[b]				N						
110 to 120 V ac, 3 Channel TPS				A						
220 to 240 V ac, 3 Channel TPS				B						
Internal Memory										
96 Mbyte for History – Typically 12 million samples					2					
Memory Card Size										
None						N				
4 Gbyte CF Card						E				
8 Gbyte CF Card						F				
USB Memory Stick Size										
None							0			
2 Gbyte USB Memory Slick							5			
4 Gbyte USB Memory Stick							6			
8 Gbyte USB Memory Stick							7			
USB Ports on Rear Surface										
None								N		
2 USB Ports on Rear Surface								R		
Serial Communication Ports on Rear Surface										
None									0	
2 EIA 232/485/422 Serial Communication Ports on Rear Surface									1	
Form C Relays[a]										
None										N
3 Form C Relays (Comprises 1 Option Board)										A
6 Form C Relays (Comprises 2 Option Boards)										B
9 Form C Relays (Comprises 3 Option Boards)										C
12 Form C Relays (Comprises 4 Option Boards)										D
Event Inputs[a]										
None										0
6 Event Inputs (Comprises 1 Option Board)										1
12 Event Inputs (Comprises 2 Option Boards)										2
18 Event Inputs (Comprises 3 Option Boards)										3
24 Event Inputs (Comprises 4 Option Boards)										4

Analog Outputs (required selection even if not available)	
None	N
Bridge Remote Viewing Software	
Bridge Lite (Standard)	1
Bridge Full	2
Review and Review/QuickChart Software	
Review Lite and Review/QuickChart Lite (Standard)	L
Review Full and Review/QuickChart Full	F
Auditor	
None	0
Audit Trail	1
Auditor	2
Security Manager	
None	N
Security Manager	S
Groups	
6 Groups (Standard)	1
12 Groups	2
Maths, Totalizers, and Counters	
None	N
36 Virtual Channels	A
96 Virtual Channels	B
128 Virtual Channels	C
Batch	
None	0
Batch	1
Screen Builder	
None	N
Advanced Screen Builder	A
Master Communications	
None	0
Modbus Master Communications for 16 Slaves	1
Modbus Master Communications for 32 Slaves	2

Notes

a The total combined option boards allowed for Form C Relays plus Even Inputs is 4 for Input Channel Selections 0, 1 and 2; however for Input Channel Selection 3, the number of combined option boards is 2. For example, when selecting Input Channel 2, you can have:

4 Form C Relay Boards (Selection Code D), and
0 Event Input Boards (Selection Code 0)

Or you can have:

2 Form C Relay Boards (Selection Code B), and
2 Event Input Boards (Selection Code 2).

Specify required auxillary spec: number of 250 ohm shunts – one required for each 4 to 20 mA input signal.

How to Order – Specify model number 6180AF followed by order code for each selection

Number of Input Channels[a]

0 Input Channels – 9 Option Boards allowed with this selection	-0
6 Input Channels – 9 Option Boards allowed with this selection	-1
12 Input Channels – 9 Option Boards allowed with this selection	-2
18 Input Channels – 9 Option Boards allowed with this selection	-3
24 Input Channels – 9 Option Boards allowed with this selection	-4
30 Input Channels – 9 Option Boards allowed with this selection	-5
36 Input Channels – 9 Option Boards allowed with this selection	-6
42 Input Channels – 9 Option Boards allowed with this selection	-7
48 Input Channels – 9 Option Boards allowed with this selection	-8

Password Controlled Electronic Media Flap Lock

None	N
Electronic Lock on Media Flap	L

Power Supply

90 to 264 V ac, 45 to 65 Hz; or 110 to 370 V dc	1

24 V Isolated Transmitter Power Supply (required selection even though not used)

Not used on Model 6180AF (available with Model 6100AF only)	N

Internal Memory

96 Mbyte for History – Typically 12 million samples	2

Memory Card Size

None	N
4 Gbyte CF Card	E
8 Gbyte CF Card	F

USB Memory Stick Size

None	0
2 Gbyte USB Memory Slick	5
4 Gbyte USB Memory Stick	6
8 Gbyte USB Memory Stick	7

USB Ports on Rear Surface

None	N
2 USB Ports on Rear Surface	R

Serial Communication Ports on Rear Surface

None	0
2 EIA 232/485/422 Serial Communication Ports on Rear Surface	1

Form C Relays[a]

None	N
3 Form C Relays (Comprises 1 Option Board)	A
6 Form C Relays (Comprises 2 Option Boards)	B
9 Form C Relays (Comprises 3 Option Boards)	C
12 Form C Relays (Comprises 4 Option Boards)	D
15 Form C Relays (Comprises 5 Option Boards)	E
18 Form C Relays (Comprises 6 Option Board)	F
21 Form C Relays (Comprises 7 Option Boards)	G
24 Form C Relays (Comprises 8 Option Boards)	H
27 Form C Relays (Comprises 9 Option Boards)	J

Event Inputs[a]

None	0
6 Event Inputs (Comprises 1 Option Board)	1
12 Event Inputs (Comprises 2 Option Boards)	2
18 Event Inputs (Comprises 3 Option Boards)	3
24 Event Inputs (Comprises 4 Option Boards)	4

Analog Outputs (required selection even if not available)

None	N

Bridge Remote Viewing Software

Bridge Lite (Standard)	1
Bridge Full	2

Review and Review/QuickChart Software

Review Lite and Review/QuickChart Lite (Standard)	L
Review Full and Review/QuickChart Full	F

Auditor

None	0
Audit Trail	1
Auditor	2

Security Manager

None	N
Security Manager	S

Groups

6 Groups (Standard)	1
12 Groups	2

Maths, Totalizers, and Counters

None	N
36 Virtual Channels	A
96 Virtual Channels	B
128 Virtual Channels	C

Batch

None	0
Batch	1

Screen Builder

None	N
Advanced Screen Builder	A

Master Communications

None	0
Modbus Master Communications for 16 Slaves	1
Modbus Master Communications for 32 Slaves	2

Notes

a The maximum number of Option Boards available is 9; the nine combines the Form C Relay plus the Event Input. For example, selection could be:

6 Form C Relay Option Boards (18 Form C Relays – Selection Code F)
3 Event Input Option Boards (18 Event Inputs – Selection Code 3)

Specify required auxillary spec: number of 250 ohm shunts – one required for each 4 to 20 mA input signal.

The following chapter contains Product Specifications of the Instruments:

718TC, 716C	Controllers 1/8 DIN and 1/16 DIN
740C	Series Digital Circular Chart Recording Controller
743CB	Series Field Station Micro Controller
762C	Series Single Station Micro Controller

Controllers ⅛ and 1/16 DIN

These space-saving ⅛ and 1/16 DIN size controllers are a cost-effective solution for single loop applications. In addition, they are specifically designed for connectivity to small systems. The Modbus RS-485 interface provides a low-cost I/O solution with local display for PC-based applications running under Windows 3.10 or higher and, when connected to an I/A Series System for Windows NT, allows you to start small and expand as your process expands. 718 Series ⅛ DIN (48mm x 96mm) and 716 Series 1/16 DIN (48mm x 48mm) controllers include state-of-the-art self-tuning/adaptive tuning that keeps your process in control and enables quick and easy start-ups. Configuring controllers with fuzzy logic takes time and requires in-depth process knowledge. With 718/716 Series controllers, start-ups are as simple as (1) wiring the instrument, (2) configuring set points and alarms, and (3) initiating the autotune function. Refer to Product Specifications sheets for complete descriptions and specifications: PSS 2C-1B3A (718T) and PSS 2C-1B5A (716C).

- A Soft Start function for continuous output limiting, allowing configuration of the maximum output rate and duration, preventing thermal shock, and providing safe operation
- An Anti-windup function for safe operation during batch changes
- A Ramp-and-Soak function controls the rate at which your process changes
- Logic inputs for remote operation

Specifications

	718TC	716C
Opto-isolated RS-485 Modbus serial communication interface	x	x
PID control with programmable ramp and soak function, 40 to 20 mA or 0 to 20 mA control signal, or time proportional control with relay outputs	x	x
Auto-tuning, SMART adaptive tuning	x	x
Anti-windup	x	
Independent set points selectable from external input contacts	4	2
Analog Outputs	1	1
Relay Outputs	3	2
Inputs: Universal, TC type, mV, V, mA, and RTD, fully selectable and keyboard programmable	x	x
Output "Turn Off" function allows controller to be used as indicator	x	x
Lock-out function prevents unauthorized configuration	x	x
NEMA 4X	x	x
Accurate to 0.2% full scale (Measurement)	x	x

718TC
How to Order – Specify Model Code 718TC

⅛ DIN Process Controllers with Universal Input				
4 Digits Temperature Controller with Universal Input and Local Set Point	718TC			
Outputs				
One mA output + Three Relays + Two Digital Inputs + Auxiliary Power Supply		-71		
Communication				
No Communication			2	
RS-485, Modbus Communication			3	
Power Supply				
100 to 240 V ac				3
24 V dc				5

716C
How to Order – Specify Model Code 716C

1/16 DIN Temperature Controllers with Universal Input						
Dual 4-digit display Temperature Controller	716C					
Control Action						
PID or SMART Adaptive Control		-0				
Output Analog Type						
mA linear Control Output as heating, cooling, or analog retransmission			7			
Output Relay Type						
Two Relay Outputs				1		
Alarms and Communication						
Alarm 2					1	
Alarm 2 + opto-isolated RS 485					3	
Power Supply						
100 to 240 V ac						3
24 V ac or dc						5

740C Series Digital Circular Chart Recording Controller

- Brilliant, 40-character dot matrix display
- Wide range of standard inputs including mA, mV, Thermocouple, and RTD
- Completely watertight and dust-tight. Conforms to NEMA Type 4 requirements
- One or two completely independent controllers with or without EXACT self-tuning
- Dual multifunction ramp generators
- Four independent timers for logic or event-driven activities

The 740C Digital Circular Chart Recording Controller controls up to two variables and continuously records up to four electronic analog signals on a 12-inch circular chart. This microprocessor-based unit also offers a wide variety of user-configurable process supporting functions such as alarms, totalizers, calculations, and curve characterizers.
Refer to Product Specifications sheet PSS 2C-1A7 A for complete description and specifications.

Physical Specifications

Environmental Protection: Completely water-tight and dust-tight, reinforced polyester enclosure. Conforms to the stringent requirements of NEMA Type 4

Dimensions: Nominal 15.6 in wide by 17.3 in high by 7.9 in deep

Mounting: Surface, panel, or pipe

Display Format: Blue-green, fluorescent panel with 40 dot matrix characters

Functional Specifications

Pens: 1, 2, 3, or 4 as specified. Pen 1 (inner position) is red, pen 2 is violet, pen 3 is green, pen 4 (outer position) is blue.

Supply Power: 90 to 132 V or 180 to 264 V ac, as specified, 45 and 65 Hz, 30 watts

Ambient Temperature Limits: 0 to 50°C (32 to 122°F).

Relative Humidity Limits: 5 and 95%, noncondensing.

Input Signals: 0 to 20 mV through 0 to 100 V dc; RTD, ANSI, or IEC 100 ohm platinum, 10 ohm copper, 120 ohm nickel; thermocouple, ISA or ANSI Types T, J, E, C, L, K, N, R, S, and B. All inputs are fully isolated from line power, ground, and each other.

Signal Conditioning: Square root, 3/2 and 5/2 power; log 10

Chart Speed: Configurable from 1 to 4096 hours for each revolution.

Charts: Approximately 10 complimentary, 24-hour charts with 0 to 100% graduations are supplied with the recorder. Order quantity and range of charts desired separately.

Sample Rate: Two samples per second on each channel.

Alarms: Up to 4 alarms with individual set points on each channel. Configurable for high, low, deadband, and rate-of-change alarm action.

Optional Features

Transmitter Power Supply: 29 V dc for up to four 2-wire transmitters.

Totalizer: Up to four fully scalable totalizers. Configurable reset and preread functions.

Calculations and Characterizer: Standard arithmetic functions plus preconfigured specialized applications.

Contact Inputs: Up to 16 contact inputs for manipulating controller functions from external events.

Contact Outputs: Dry relay contacts for alarm status and remote counter drivers.

NEMA 4X: Provides additional corrosion resistance in conformance with NEMA Type 4X requirements.

How to Order – Specify model number 740CA followed by order code for each selection

Nominal Supply Voltage and Frequency	
120 V ac, 50/60 Hz	A
240 V ac, 50/60 Hz	C
Input Channel One	
0 to 20 mV through 0 to 5V, RTD and TC(1)	1
4 to 20 mA(1)	3
Input Channel Two	
None	0
0 to 20 mV through 0 to 5 V, RTD and TC(1)	1
4 to 20 mA(1)	3
Input Channel Three	
None	0
0 to 20 mV through 0 to 5 V, RTD and TC(1)	1
4 to 20 mA(1)	3
Input Channel Four	
None	0
0 to 20 mV through 0 to 5 V, RTD and TC(1)	1
4 to 20 mA(1)	3
Control Type	
One PID without EXACT Tuning	A
One PID with EXACT Tuning	B
Two PIDs without EXACT Tuning	C
Two PIDs, one with EXACT Tuning	D
Two PIDs, both with EXACT Tuning	E
Output Type	
Single 4 to 20 mA Output for one Controller	A
Duplex 4 to 20 mA Outputs for one Controller	B
Two Single 4 to 20 mA Outputs for two Controllers	C
Two Duplex 4 to 20 mA Outputs for two Controllers	D
Single 4 to 20 mA Output for one Controller, and Duplex 4 to 20 mA Output for second Controller	E
Single Time Duration, Relay Output for one Controller	F
Duplex Time Duration. Relay Outputs for one Controller	G
Two Single Time Duration, Relay Outputs for two Controllers	H
Two Duplex Time Duration, Relay Outputs for two Controllers	I
Single Time Duration, Relay Output for one Controller, and Duplex Time Duration, Relay Output for second Controller	J

Optional Selections

Nominal 28 V dc Transmitter Power Supply	A
Calculated Variables and Custom Curve	B
One Integral Totalizer	C
Two Integral Totalizers	D
Three Integral Totalizers	E
Four Integral Totalizers	F
Dual Ramp Generator	G
Tamper-Evident Feature	K
NEMA 4X Enclosure(2)	L
Polycarbonate Chart and User Interface Windows	M
Pipe Mounting(2)	N
Eight Relay Outputs	T
Eight Contact Inputs(3)	U
Sixteen Contact Inputs(3)	V

Optional Remote Totalizer and Retransmission Outputs

One Remote Totalizer Output(4)	1
Two Remote Totalizer Outputs(4)	2
Three Remote Totalizer Outputs(4)	3
Four Remote Totalizer Outputs(4)	4
One 4 to 20 mA Retransmission Output(5, 6)	5
Two 4 to 20 mA Retransmission Outputs(5, 6)	6
Three 4 to 20 mA Retransmission Outputs(5, 6)	7
Four 4 to 20 mA Retransmission Outputs(5, 6)	8

Notes

1 Operating ranges are field-configurable
2 NEMA 4X is standard with pipe mounting code N
3 The available of Relay Output, Contact Input, and Retransmission Output Options is space-dependent and therefore contingent upon previously selected functions. The instrument will accommodate a maximum of three function PWAs, with each PWA loaded as shown in Table 1
4 A totalizer and at least one relay output must be selected for each totalizer output selected
5 The available of Relay Output, Contact Input, and Retransmission Output Options is space-dependent and therefore contingent upon previously selected functions. The instrument will accommodate a maximum of three function PWAs, with each PWA loaded as shown in Table 1
6 The total number of 4 to 20 mA outputs is limited to four including controller outputs. The number of Retransmission Outputs available therefore depends on the Output Type previously specified as shown in Table 2

Table 1 PWA Functions and Capability

Number of PWAs Required	Selected Function
1	One or Two Single 4 to 20 mA Control Outputs
1	One or Two 4 to 20 mA Retransmission Outputs
1	Each Duplex 4 to 20 mA Control Output
1	Two or Four Relay Outputs
1	Eight contact Inputs Plus One or Two Single 4 to 20 mA Control or Retransmission Outputs
1	Eight Contact Inputs Plus One Duplex 4 to 20 mA Control Output

Table 2 4 to 20 mA outputs

Output Type Code	Max. Number of Retransmission Outputs
A	3
B	2
C	2
D	0
E	1
F through J	4

This product and its components are protected by one or more of the following U.S. patents: D333,631 and RE33,267. Corresponding patents have been issued or are pending in other countries.

743CB Series Field Station Micro Controller

The 743CB Series FIELD STATION MICRO controller is functionally identical to the 762C controller and is completely protected by a corrosion resistant, weatherproof NEMA 4X enclosure. It combines user simplicity with broad capability making it ideal for all applications, from the simplest to the most advanced.
Refer to Product Specifications sheet PSS 2C-1A9 B for complete description and specifications.

Standard Features

- Highly corrosion resistant and weather proof NEMA 4X enclosure
- Ambient Temperature Limits -10°C(14°F) to 60°C(140°F)
- Brilliant, fully interactive fluorescent display
- Two 4–20 mA analog outputs
- Large, easy-to-use operator keypad
- Two independent EXACT PID Control Functions
- Two 7 DigitProcess totalizers
- Single Station Cascade Control
- Single Station Auto-Selector Control
- Two 3 Variable Indicator Stations
- Two Auto/Manual Transfer Stations
- Split Range Valve Outputs

Optional Features

- Output Isolation for one 4-20 mA Output
- Platinum RTD Input
- Enclosure Heater for -20°C(-14°F) lower temperature limit available on Vac Supply Voltage only

Physical Specifications

- 762CSA for retrofit into existing shelves, 20 or 30 Pin I/O
- 762CNA for New Panel installations, 32 Screw Terminals
- Dimensions: Nominal 10.3" wide by 12.6" high by 5.2" deep
- Surface, Panel or 2" Pipe mount

Functional Specifications

Control Modes: P, PI, PD, PID, Nonlinear and EXACT Self Tuning.

Functions: External Integral (Reset), Output Limits, Output Tracking, Output Summing, Output Multiplying, Ratio, Dynamic Compensation, Signal Selection, Cascade Control, Arithmetic Calculations, Logic Gates.

Signal Conditioning: Square, Square Root, Filter, Characterizer, Bias and Gain.

Discrete Inputs: 2 Contact or Transistor Switch Inputs for remote status changes such as Auto/Manual, Remote/Local Setpoint, Output Track, etc. 5 Vdc nominal open circuit voltage, 1 mA maximum current.

Analog Inputs: any or all of the following 6 proportional inputs: 4 Voltage or Current; 1-5 Vdc, 4-20 mA or 10-50 mA. Standard is 4 20 mA using a 250 Ohm resistor. Uses 100 Ohm for 10-50 mA. Remove resistor for 1-5 Vdc. 2 Frequency; 1-9999 Hz, compatible with typical flow meter rate pulse signals.

Discrete Outputs: 2 Open Collector Transistor Switch outputs for status indication of Auto/Manual, Remote/Local Setpoint, Alarms and Gates, etc. 50 Vdc maximum at 250 mA dc maximum.

Analog Outputs: Output 1; 4-20 mA into 500 Ohms (isolation is optional for this output) Output 2; 4-20 mA or 1-5 Vdc jumper selectable.

Alarms: 4 dual level alarms, each with an adjustable dead band and 1 Boolean output. Each is configurable for Absolute, Deviation or Rate of Change. High/High, Low/Low or High/Low types and Nonlatching, Latching and permissive are available. Each alarm can be attached to any of the internal analog signals.

Nominal Supply Voltage and Frequency: 24, 100, 120, 220 or 240 Vac, 50/60 Hz or 24 Vdc, as specified.

Power Consumption: 15 VA, (27VA with optional heater)

Electrical Classifications:
CSA/FM Ordinary Locations
CSA/FM Class 1, Division 2, Groups A, B, C & D

Reference: PSS 2C-1A9 B for complete specifications.

Note: The743CB application and configuration structure is available in a Panel mounted package under Model Code 762C

How to Order – Specify model number 743CB (Field Station Micro Controller) followed by order code for each selection

Supply Voltage Frequency

120 V ac, 50/60 Hz	A
220 V ac, 50/60 Hz	B
240 V ac, 50/60 Hz	C
24 V dc	D
24 V ac, 50/60 Hz	E
100 V ac, 50/60 Hz	J

Mounting

Pipe Mounting	F
Flush or Surface Mounting	P

Optional Selections

Isolated Control Output	1
RTD Temperature Input(1)	2
Enclosure Heater(2)	3

Example: 743CB-AF-1

Optional Electrical Classification

CS-E/CN-Z CSA certified for use in class I, groups A,B,C,D, Division 2 locations.
CS-E/FN-Z FM certified for use in class I, groups A,B,C,D, Division 2 locations.

Optional Features

Circuit Board Coating: A conformal sealant applied to the circuit board and a special oil added to connectors to improve corrosion resistance	CBC
Surge Suppressor: For use with serial communication input when external wiring is located near transient producing sources such as motors, solenoids, high voltages, etc.	SURSUP

Accessories

Copy Accessory: All of the operating configuration is stored in a nonvolatile, random access memory (NOVRAM) module. The copy accessory permits the entire contents of the memory module to be quickly copied into another memory module, either a spare or one from another controller. Refer to instruction sheet MI 018-900	K0143DV
Spare Memory Module	L0122RJ

Notes

1 100 ohm platinum RTD, 200°F (111°C) minimum span. Factory calibrated for 0° to 400°F unless specified otherwise.
2 Required for operating temperatures below 14°F (-10°C). Not available with voltage code D, 24 V dc power.

This product and its components are protected by one or more of the following U.S. patents 3,798,426; 4,616,332; 4,658,348; 4,704,676; and RE33,267. Corresponding patents have been issued or are pending in other countries.

762C Series Single Station Micro Controller

The 762C Series Controller is a multi-purpose station with the ability to accomplish one or two independent control strategies concurrently. It can also be configured as one or two 3-variable indicator stations and one or two auto/manual transfer stations. Control, indicator, and auto/manual functions are intermixable. As symbolized by the "CE" marking, these controllers conform to the European Union directives.

Standard Features

- Brilliant, fully interactive fluorescent display
- Two 4-20 mA analog outputs
- Easy to use operator keypad
- Two independent EXACT PID Control Functions
- Two 7-DigitProcess totalizers
- Single Station Cascade Control
- Single Station Auto-Selector Control
- Two 3-Variable Indicator Stations
- Two Auto/Manual Transfer Stations
- Split Range Valve Outputs

Optional Features

- Output Isolation for one 4-20 mA Output
- Platinum RTD Input

Physical Specifications

- 762CSA for retrofit into existing shelves, 20 or 30 Pin I/O
- 762CNA for New Panel installations, 32 Screw Terminals
- Mounting dimensions: 5.5" high, 2.7" wide Panel Cutout, 13.0" deep

Functional Specifications

Control Modes: P, P1, PD, PID, Nonlinear and EXACT Self Tuning.

Functions: External Integral (Reset), Output Limits, Output Tracking, Output Summing, Output Multiplying, Ratio, Dynamic Compensation, Signal Selection, Cascade Control, Arithmetic Calculations, Logic Gates.

Signal Conditioning: Square, Square Root, Filter, Characterizer, Bias and Gain.

Discrete Inputs: 2 Contact or Transistor Switch Inputs for remote status changes such as Auto/Manual, Remote/Local Setpoint, Output Track, etc. 5 Vdc nominal open circuit voltage, 1 mA maximum current.

Analog Inputs: any or all of the following 6 proportional inputs: 4 Voltage or Current; 1-5 Vdc, 4-20 mA or 10-50 mA. Standard is 4-20 mA using a 250 Ohm resistor. Uses 100 Ohm for 10-50 mA. Remove resistor for 1-5 Vdc. 2 Frequency; 1-9999 Hz, compatible with typical flow meter rate pulse signals.

Discrete Outputs: 2 Open Collector Transistor Switch outputs for status indication of Auto/Manual, Remote/Local Setpoint, Alarms and Gates, etc. 50 Vdc maximum at 250 mA dc maximum.

Analog Outputs: Output 1; 4-20 mA into 500 Ohms (isolation is optional for this output) Output 2; 4-20 mA or 1-5 Vdc jumper selectable.

Alarms: 4 dual level alarms, each with an adjustable dead band and 1 Boolean output. Each is configurable for Absolute, Deviation or Rate of Change. High/High, Low/Low or High/Low types and Nonlatching, Latching and permissive are available. Each alarm can attached to any of the internal analog signals.

Nominal Supply Voltage and Frequency: 24, 100, 120, 220 or 240 Vac, 50/60 Hz or 24 Vdc, as specified.

Power Consumption: 15 VA

Electrical Classifications:
CSA/FM Ordinary Locations
CSNFM Class 1, Division 2, Groups A, B, C & D

Reference: PSS 2C 1A1 D for complete specifications.

Note: The 762C application and configuration structure is available in a NEMA 4 field mounted package under Model Code 743CB

How to Order – Specify model number 762CNA (Single Station Micro Controller, Housing-Mounted) followed by order code for each selection

Nominal Supply Voltage and Frequency

120 V ac, 50/60 Hz	-A
220 V ac, 50/60 Hz	-B
240 V ac, 50/60 Hz	-C
24 V dc	-D
24 V ac, 50/60 Hz	-E
100 V ac, 50/60 Hz	-J

Housing and Signal Connections

32-Position Terminal Blocks on Rear of Housing	T
Controller Chassis without Housing	W

Optional Selections

Output Isolation, 4 to 20 mA (Output 1 only)	-1
Platinum RTD Input[a] (Input 1 only)	-2
Example: 762CNA-AT	-1

Notes

a Minimum span with platinum RTD input is 110°C (198°F).

How to Order – Specify model number 762CSA (Single Station Micro Controller, Shelf-Mounted) followed by order code for each selection

Signal Connector

20-Pin Signal Connector, Quick Disconnect[a]	-2
30-Pin Signal Connector, Quick Disconnect	-3

Nominal Supply Voltage and Frequency

120 V ac, 50/60 Hz	A
220 V ac, 50/60 Hz	B
240 V ac, 50/60 Hz	C
24 V dc	D
24 V ac, 50/60 Hz	E
100 V ac, 50/60 Hz	J

Optional Selections

Output Isolation, 4 to 20 mA (Output 1 only)	-1
Platinum RTD Input[b] (Input 1 only)	-2
Example: 762CSA-3E-12	

Accessories

Copy Accessory: All of the operating configuration is stored in a nonvolatile, random access memory (NOVRAM) module. The copy accessory permits the entire contents of the memory module to be quickly copied into another memory module, either a spare or one from another controller. Refer to instruction sheet MI 018-885	L0122TU
Spare Memory Module	K0141LN

Notes

a The following controller features cannot be accessed when the 20-pin signal connector is used: Analog Input 3, frequency inputs, pulse inputs, RTD input option, 28 V dc field power to one transmitter (power can be supplied to one transmitter only).

b Minimum span with platinum RTD input is 110°C (198°F)

Auxiliary Specifications

- Unless otherwise specified, all 743CB and 762C controllers are shipped with a Factory Default configuration consisting of a single measurement input, a local set point, PID EXACT control with EXACT turned off and scale ranges of 0 to 100 percent.
- The Optional Factory Configurations that follow provide solutions for some of the basic applications commonly encountered. They represent only a very limited number of possibilities that can be accomplished by this extremely powerful controller and should not in any way be considered the only possibilities.
- Because any list of standard configurations cannot be all inclusive, users should select the arrangement that most closely meets their needs. Any changes that are necessary to meet specific needs can easily be accomplished in the field. It will usually be necessary to at least change the loop tag, the scale ranges and the PID controller tuning parameters to suit process requirements.

How to Order – Specify one of the Auxiliary Specification Reference described below. There is no increase in the base price for any of these configurations. When specified, the Auxiliary Specification Reference will be displayed in the loop tag to assist in initial field identification.

Axillary Specifications

Single Loop Controller	SINGL C			
With Hi/Lo Measurement Alarm	SINGL C1			
With One Totalizer	SINGL C2			
With Hi/Lo Alarm and Totalizer	SINGL C3			
With Split Range Outputs	SINGL C4			
With 3-Variable Indicator Station	SINGL C5			
With Auto Manual Transfer Station	SINGL C6			
Dual Loop Controller		DUAL C		
With Hi/Lo Measurement Alarms		DUAL C1		
With Two Totalizers		DUAL C2		
With Alarms and Totalizers		DUAL C3		
3-Variable Indicator Station			IND S	
With Three Hi/Lo Alarms			IND S1	
With Two Totalizers			IND S2	
With Alarms and Totalizers			IND S3	
With Second 3-Variable Indicator Station			IND S4	
With Second 3-Variable Indicator Station, Hi/Low Alarms and Totalizers			IND S4	
With Auto Manual Transfer Station			IND S6	
Auto Manual Transfer Station				A/M S
With Hi/Low Alarm				A/M S1
With Totalizer				A/M S2
With Alarm and Totalizer				A/M S3
With Second Auto Manual Transfer Station				A/M S4
With Second Auto Manual Transfer Station, Hi/Low Alarms and Totalizers				A/M S5
With Split Range Outputs				A/M S6
Single Loop Flow Ratio Controller, 0 to 2 Ratio Range, square root inputs	RATIO C			
With Hi/Lo Alarm	RATIO C1			
With One Totalizer	RATIO C2			
With Hi/Lo Alarm and Totalizer	RATIO C3			
With Split Range Outputs	RATIO C4			
with 3-Variable Indicator Station	RATIO C5			
with Auto Manual Transfer Station	RATIO C6			
Cascade Controller		CASCDE C		
With Hi/Lo Primary Alarm		CASCDE C1		
With One Totalizer		CASCDE C2		
With Hi/Lo Alarm and Totalizer		CASCDE C3		
Auto Selector Controller, low select			A SEL C	
With Hi/Lo Alarms			A SEL C1	
With Totalizer			A SEL C2	
With Alarms and Totalizer			A SEL C3	
With High Select			A SEL C4	
Single Loop Controller with Pulse or contact driven set point				PULSE SP
Single Loop Controller with output freeze from external contact input 1				FREEZE
Single Loop Controller with output switching to a preset value from external contact Input 1				PRESET

The following chapter contains Product Specifications of the Instruments:

710D I/A Series[Æ] Digital Indicator 1/8 DIN

710D I/A Series[Æ] Digital Indicator 1/8 DIN

The Foxboro 710D microprocessor-based indicator offers outstanding performance features in a cost-effective package. Designed specifically for equipment manufacturers who demand tight process monitoring, the 710D has a variety of standard features commonly found as options on our competitors' indicators. The IP54 faceplate allows this unit to be used in applications where dust conditions exist.

The 710D high-quality display station expands performance and functionality. Features such as 10-segment characterizers, transmitter power supply, analog retransmission, and advanced alarming give you the tools needed for low-cost, reliable indication and alarming. Modbus RS-485 serial interface provides communication when data collection capabilities and remote operation are needed.

The man/machine interface provides a three-color customized display with two alphanumeric tiers, one four-digit process display, and six status indictors.

Refer to Product Specifications sheet PSS 2C-1B2A for complete description and specifications.

Specifications

Display:

Numeric Display (4 digits): Shows the actual measured value or (during configuration) used in conjunction with the alphanumeric display to show the parameter name and its setting.

Alphanumeric Display (2 digits): Shows the engineering units of the measured value or (during configuration) used in conjunction with the numeric display to show the parameter name and its setting.

Housing:

Material: ABS black. Self-extinguishing degree V-O according to UL, VDE, and CSA.
Front Panel: Designed and tested for IP54 according to IEC 529 and CEI 70-1
Installation: Panel mounting by means of brackets
Dimensions: 48 x96 mm (1.890 x 3.780 in) according to DIN 43700; 149 mm (5.866 in) deep
Weight: 600 grams (21 ounces) maximum.

Operating Limits:

Operating Temperature: From 0 to +50°C (32 to 122°F)
Storage Temperature: From -20 to +70°C (-4 to 158°F)
Humidity: From 20% to 85% RH non-condensing

Electrical Requirements:

Power Supply (Switch Mode): 100 to 240 V ac. 50/60 Hz (+10%/-15% of the nominal value)
Power Consumption: 8VA maximum
Insulation Resistance: >100Mohm; according to IEC 348.
Dielectric Strength: 1500 Vrms according to IEC 348.
Noise Immunity: Electrical fast transient/burst requirements: Severity Level 3 (according to IEC 801-4)
Agency Classification: Conforms to European Union Directives symbolized by CE

Auxiliary Transmitter Power Supply

Voltage Output: Isolated 5, 10, 12 or 24 V dc (jumper selectable)

Maximum Current: 25 mA dc

Alarms: Up to 2 independent alarms available

Alarm Outputs: Two SPST relays, NO or NC (jumper selectable)

Contact Ratings: 2 Amps/30 V dc on a resistive load. 0.6 Amps/110V dc on a resistive load. 0.5 Amps/250V ac on a resistive load. 0.3 Amps/110 V on an inductive load

Software Key: A programmable 4-digit code for protecting alarm setpoints

Performance Specifications

Analog Input:

Input Type: Universal Inputs, TC, RTD, mA, Volts

Accuracy: ±0.1% full scale span or ±1 digit, @ 25°C and nominal power supply voltage
Calibration: According to DIN 43760
Temperature Drift: <200 ppm/°C of full scale (reference junction excluded)
Common Mode Rejection Ratio: 120 dB @ 50/60 Hz
Normal Mode Rejection Ratio: 60 dB @ 50/60 Hz
Sampling Time: 100 ms typical

Outputs:

Analog Retransmission Output:

Isolated 0-20 mA; 4-20 mA; or 0-10 Volts (programmable). (Not available with Digital Communications.)
Digital Communications: Modbus protocol with Opto-isolated RS-485

How to Order – Specify model number 710D (Dual 4-digit display indicator) followed by order code for each selection

Power Supply				
100–240 V ac	-3			
24 V ac/dc	-5			
Input				
TC, mV, mA, RTD		9		
Alarms				
Two Alarms			11	
Accessories				
Auxiliary Power Supply				1
mA Analog retransmission and Auxiliary Power Supply				2
RS-485 and Auxiliary Power Supply				3
RS-485				4
mA Analog retransmission				5

Accessories and Supplies

The following chapter contains Product Specifications of the Instruments:

Humitex[Æ] Circular and Strip Charts

Pens and Pen Arms

Humitex[Æ] Circular and Strip Charts

Foxboro also prints circular charts for American Meter, Arcco-Anubis, Bailey, Bristol, Gotham (Ametek), Honeywell (Brown), Mercury, Palmer, Ranarex (Permutit), Rockwell, Taylor, UGC Industries, Warren Controls (Tagliabue), and Weksler which are made to their specifications.

Options for 300m (12in) circular charts:

Description	Code[2]
Heavy Paper	-HP
Backprinting[3]	-BP
Mullins Slotting[4]	-MS-HP
Read-Out Holes[5]	-ROH-HP
Tejas Chart Changer Hole	-TCH-HP
Overprinting of Two-Color Charts[6]	-OP
Color of Ink on Chart:	
Green	-GRN
Scanner Blue Ink	-BLU-SBI
Black	-BLK
Aqua	-AQUA
Dark Blue	-DBLU
Shrink Wrap	-SW

Circular Charts Specifications

Standard circular charts are printed with gray ink, 1 side only, on 0.122 mm (0.0048 in) thick paper. Circular charts with heavy paper are printed on 0.178 mm (0.0070 in) paper. Charts are packaged 100 to a box.

Instrument	Chart Size
125 mm (5 in) Side-Mounted Recorder	125 mm (5 in)[1]
12 Series Recorders	300 mm (12 in)
40/740 Series Recorders	300 mm (12 in)
39A Series Flow Recorders	300 mm (12 in)[1]
39 B Series Flow Recorders	MW Series 300mm (12in)[1]
740R Series Recorders	300 mm (12 in)

Notes

1 Always printed on heavy paper.
2 Add as suffix to circular chart number.
3 Add Foxboro backprint number.
4 Specify drop time and/or day of the week.
5 Specify time.
6 Must be available as an existing chart; see Catalog 600.

Foxboro recording charts complement the precision and fine craftsmanship of our wide range of recording instruments. Charts combine the essential elements of special high-quality paper with rigidly controlled printing and trimming procedures. Over 17,000 different charts can be supplied in ranges and calibrations to meet the requirements of practically any process recording application. Special charts and new ranges not listed in the Chart Catalog and Dial List (Catalog 600) may require a new electro printing plate for specific customer needs. Contact our nearest Branch Office for Catalog 600.

Strip Chart Specifications

4 in Roll,100 mm Roll, and SCAN-FOLD charts can be supplied with or without time mark numbering. Standard time mark numbering is the hour of the day printed on the left side of the chart at 2-hour intervals (on the even hour). The standard speed for the 4 in Roll and SCAN-FOLD is 3/4 in/h which coincides with the chart drive speed. The standard speed for the 100 mm Roll is 20 mm/h.
A large selection of non-standard time mark numbering is available to match the chart speeds of your recorders. Refer to Catalog 600 for a listing.

4 in Roll Chart	One 30-day chart per box
100 mm Roll Chart	One 30-day chart per box
SCAN-FOLD Chart	Two 16-day charts per box

Records	Chart	
E20S 53 54 64 120 220S	For 4 in Roll, specify chart number suffix -T if time numbering is required. For SCAN-FOLD, specify chart number suffix -6TX if time numbering is required.	
E27R 126S, 127S 226S, 227S	Specify chart number suffix -T if time numbering is required	
761R 760R 762R 751R	Fold - L0122RQ - L0122RS Roll - L0122RR - L0122RT Fold - L0122RS Roll - L0122RT	50 Divisions 0-100 Linear 50 Divisions 0-100 Linear 0-100 Linear 0-100 Linear

How to Order
Follow the steps below, then contact your Foxboro representative, or call, in North America: 1-888-FOXBORO (1-888-369-2676), or International: 011-508-543-8750.

Toll Free Number
To order charts, contact your Foxboro representative or call (in the U.S.A.) 1-800-343-1198. In Massachusetts, call 1-800-322-2322.

Types of Calibration Charts Available for Circular and Strip Charts
Uniform, Differential Pressure, Flow (Type 27), Vacuum Pressure, Square Root, Vapor Pressure, Dairy Charts, Dew Point, Thermocouple, Thermopile, Flow-Open Channel Weir and Flume, Log Function, Specific Gravity, and Balsbaugh.

Pens and Pen Arms

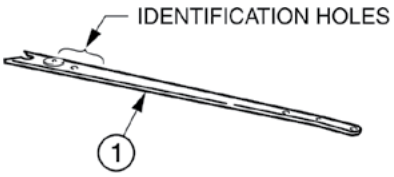

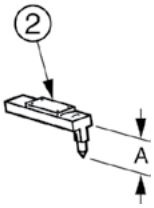

- Large, Disposable, Fiber Tip Pens for Circular Chart Recording Instruments
- Designed to Write 365 meters (1200 feet)
- Prepackaged 6 Pens per Car

Specifications
Recorders:

Pen Location	Pen Arm, Item 1		Fiber Tip Pens (Package of 6), Item 2		A-Length	
	Part Number	Identification Holes	Color	Part Number	mm	in
40, 40M, 40P, and 39 Series Rectangular Case Recorders						
1-Pen	0044897	2	Red	L0121CH	12	0.47
2-Pen						
inner	M0122AC	1	Violet	L0121CM	6	0.24
outer	0044897	2	Red	L0121CH	12	0.47
3-Pen						
inner	M0122AC	1	Violet	L0121CM	6	0.24
center	0044897	2	Red	L0121CH	12	0.47
outer	M0122AB	3	Green	L0121CU	18	0.71
4-Pen						
inner	M0122AC	1	Violet	L0121CM	6	0.24
next to inner	0044897	2	Red	L0121CH	12	0.47
next to outer	M0122AB	3	Green	L0121CU	18	0.71
outer	M0122AA	0	Blue	L0121DA	24	0.94
12R Series Round Case Recorders						
1-Pen	0044899	2	Red	L0121CH	12	0.47
2-Pen						
outer	0046965	3	Violet	L0121CR	6	0.24
inner	0044899	2	Red	L0121CJ	12	0.47
12RD (1 to 3 Pen) and 12RM (1 and 2 Pen) Series Round Case Recorders						
1-Pen	0044899	2	Red	L0121CT	18	0.71
2-Pen						
inner	0046964	1	Violet	L0121CR	12	0.47
outer	0044899	2	Red	L0121CT	18	0.71
3-Pen						
inner	M0122NE	0	Violet	L0121CR	12	0.47
center	0046964	1	Red	L0121CT	18	0.71
outer	0044899	2	Green	L0121CZ	24	0.94

Recording Controllers:
Disposable Fiber Tip Pen Cartridges for 40P/40M/12 and 740 Chart Recorders

A-Length		Red	Violet	Green	Blue	Black
mm	in					
6	0.24	L0121CJ	L0121CM	L0121CK	L0121CL	L0121CN
12	0.47	L0121CH	L0121CR	L0121CP	L0121CQ	L0121CS
18	0.71	L0121CT	L0121CW	L0121CU	L0121CV	L0121CX
24	0.94	L0121CY	L0121DB	L0121CZ	L0121DA	L0121DC

Specifications (continued)

Recording Controllers: 40, 40M, and 40P Series Rectangular Case Recording Controllers:[1,2,3]

Controller Type	Pen Location	Pen Arm, Item 1 Part Number	Pen Arm, Item 1 Identification Holes or color	Fiber Tip Pens (Package of 6), Item 2 Color	Fiber Tip Pens (Package of 6), Item 2 Part Number	A-Length mm	A-Length in
Single Action							
	1-Pen	0044897	2				
	Index	0032301	Plain	Red	L0121CH	12	0.47
Single Action with Additional Pen							
	2-Pen						
	inner	M0122AC	1	Violet	L0121CR	12	0.47
	outer	0044897	2	Red	L0121CT	18	0.71
	Index	M0122LT	Red				
Single Action with 2 Additional Pens							
	3-Pen						
	inner	M0122AC	1	Violet	L0121CR	12	0.47
	center	0044897	2	Red	L0121CT	18	0.71
	outer	M0122AB	3	Green	L0121CZ	24	0.94
	Index	M0122LT	Red				
Triple Setting							
	1-Pen	0044897	2				
	Index						
	inner	M0122LS	Violet	Red	L0121CY	24	0.94
	center	M0122LT	Red				
	outer	M0122MA	Green				
Ratio							
	2-Pen						
	inner	M0122AC	1	Violet	L0121CR	12	0.47
	outer	0044897	2	Red	L0121CT	18	0.71
	Index	M0122LS	Violet				
Ratio with inner Additional Pen							
	3-Pen						
	inner	M0122AC	1	Violet	L0121CR	12	0.47
	center	0044897	2	Red	L0121CT	18	0.71
	outer	M0122AB	3	Green	L0121CZ	24	0.94
	Index	M0122LS	Violet				
Duplex							
	1-Pen	0044897	2				
	Index			Red	L0121CT	18	0.71
	inner	M0122LT	Red				
	outer	M0122LS	Violet				
Auto-Selector, Dual, or Duplex with Additional Pen							
	2-Pen						
	inner	M0122AC	1				
	outer	0044897	2	Red	L0121CT	18	0.71
	Index			Violet	L0121DB	24	0.94
	inner	M0122LT	Red				
	outer	M0122LS	Violet				

Notes

1 On multiple pen recorders, if pens L0121CR (Violet), LC 121CS (Black), L0121CP (Green), or L012 CQ (Blue) are used as arcing pens, then the red inner pen (L0121CJ) must be used. Its length is 6 mm (0.24 in).

2 Black pens may be substituted for red or violet as follows:
- Use L0121CN for pen arm lengths of 6 mm (0.24 in)
- Use L0121CS for pen arm lengths of 12 mm (0.47 in)

3 If replacing box pens with fiber tip pens, the color dot on the pen arm (Item 1 in drawing) must be removed

General Information

The following chapter contains information about:

Trademarks

Corporate Headquarters

Trademarks

17-4 PH is a trademark of Armco Steel Corporation
17-7 PH is a trademark of Armco Steel Corporation
Alumel is a trademark of Hoskins Manufacturing Company
Aminco is a trademark of American Instrument Company
Bakelite is a trademark of Union Carbide Corporation
Carpenter is a trademark of Carpenter Technology Corporation
Chromel is a trademark of Hoskins Manufacturing Company
Dacron is a trademark of E. I. duPont de Nemours & Company, Inc
Duranickel is a trademark of Huntington Alloys, Incorporated
Excel is a trademark of Microsoft Corporation
Fluorinert is a trademark of 3M Company
Fluorolube is a trademark of Hooker Chemical Corporation
Grafoil is a trademark of Union Carbide Corporation
Hastelloy is a trademark of Satellite Division of Cabot Corporation
HART is a trademark of the HART Foundation
Inconel is a trademark of Huntington Alloys, Incorporated
Invensys is a trademark of Invensys plc
Kel-F is a trademark of 3M Company
Kynar is a trademark of The Pennwalt Corporation
Linatex is a trademark of Wilkinson Process Rubber, Ltd
Lotus 1-2-3 is a trademark of Microsoft Corporation
Monel is a trademark of Huntington Alloys, Incorporated
Ni-Span is a trademark of Huntington Alloys, Incorporated
Noryl is a trademark of The General Electric Company
Ryton is a trademark of Phillips Petroleum Company
Teflon is a trademark of E. I. duPont de Nemours & Company, Inc
Tefzel is a trademark of E. I. duPont de Nemours & Company, Inc
TriClamp is a trademark of Ladish Company
Viton® is a registered trademark of DuPont Dow Elastomers
Windows is a trademark of Microsoft Corporation
Windows NT is a trademark of Microsoft Corporation
All other brands may be trademarks or service marks of their respective companies.

Foxboro and I/A Series are registered trademarks of Invensys Systems, Inc.

The following are trademarks of Invensys Systems, Inc.:

Balsbaugh
CONSOTROL
d/p cell
DEWCEL
DolpHin
DYNATHERM
EXACT
FIELD STATION MICRO
FlowExpert
FOX
FoxCom
HUMITEX
Low Profile Pressure Transmitter
MINOX
SCANFOLD
SINGLE STATION MICRO
TankExpert

Foxboro®

by Schneider Electric

Foxboro, Massachusetts 02035-2099
U.S.A.

Your Foxboro representative:

Your Foxboro Representative:

Foxboro

38 Neponset Avenue
Foxboro, Massachusetts 02035 USA
Toll free within the USA 1-866-764-6477
Global +1-508-549-2424

www.fielddevices.foxboro.com

October 2015

PN FD-CT-001 Rel. 11/15

Life Is On

Foxboro
by Schneider Electric